KENNAMETAL

Technical Information

The Correct Spindle Connection
and Application Guide

The Spindle Connection

Several different types of spindle connection have been developed or optimized over the last few decades. The 7/24 ISO taper became one of the most popular systems in the market. It has been successfully used in many applications, but its accuracy and high-speed limitations prevent it from growing further due to only having one surface of contact around the gage diameter/uppermost cone. The recent combination of face contact with 7/24 solid taper provides higher accuracy in the Z-axis direction, but this also presents some disadvantages, namely the loss in stiffness at higher speeds or high side loads. Most of these tools on the market are solid and the spindles have relatively low clamping force.

In 1985, WIDIA™ (Krupp WIDIA) and Kennametal initiated a joint program to further develop the concept of taper and face contact interface and a universal quick-change system — now known as KM™ and recently standardized as ISO 26622. The KM system has a very strong design, utilizing three surfaces of contact, the flange face, and lower as well as upper ring of contact of the cone. The polygonal taper-face connection, known as PSC, is now also standardized as ISO 26623, and in the early 1990s, the HSK system started being employed on machines in Europe and later became DIN 69893 and later ISO 12164 with two rings of contact. KM4X™ is the next generation of KM targeted at heavy-duty machining due to the combination of high interference and high clamping forces.

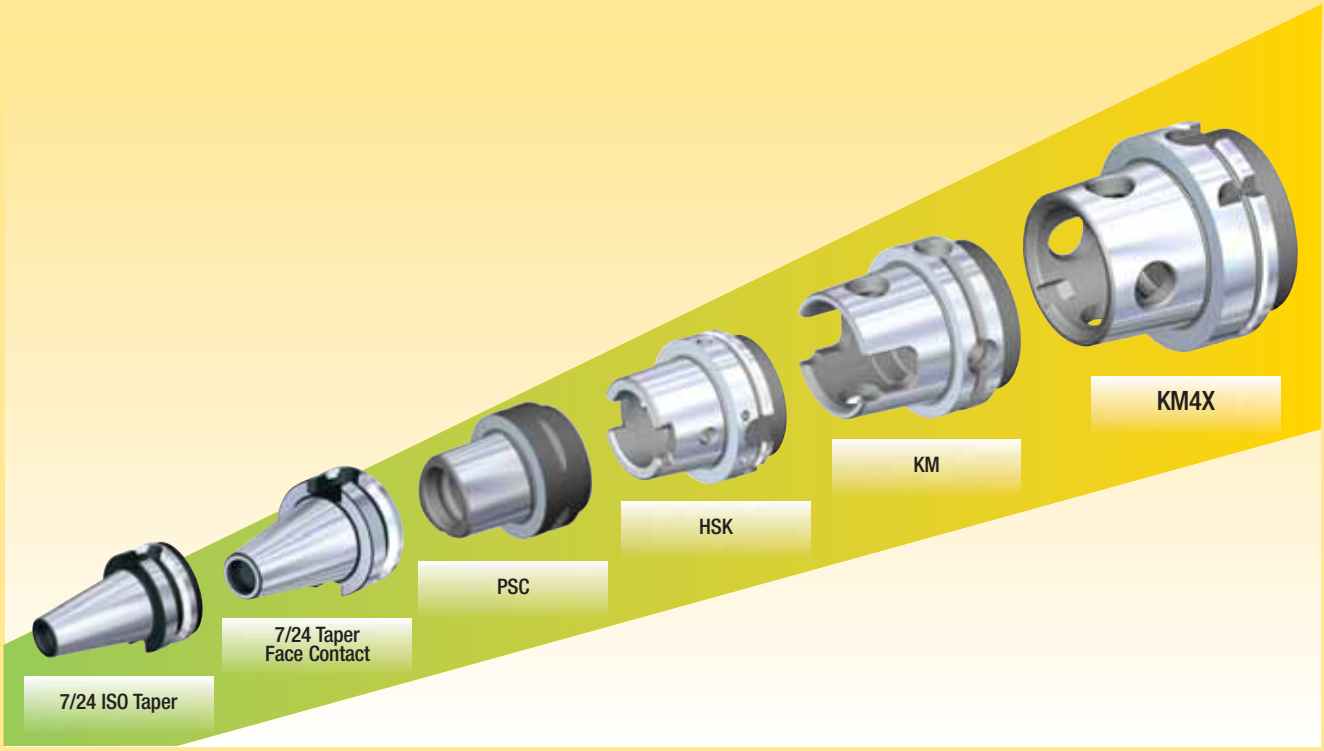

Taper Specifications

KM Micro™ and KM™ Mini

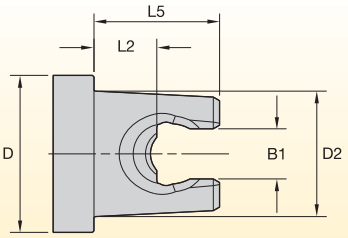

	D	D2	B1	L2	L5
KM12	12,0 .427	10,0 .394	4,2 .167	6,7 .264	13,0 .512
KM1612	16,0 .630	10,0 .394	4,2 .167	6,7 .264	13,0 .512
KM16	16,0 .630	12,0 .472	4,9 .193	7,11 .280	14,3 .562
KM2016	20,0 .787	12,0 .472	4,9 .193	7,1 .280	14,3 .562
KM20	20,0 .787	16,0 .630	6,6 .260	10,0 .394	18,0 .709
KM2520	25,0 .984	16,0 .630	6,6 .260	10,0 .394	18,0 .709
KM25	25,0 .984	20,0 .787	8,0 .314	10,0 .394	20,0 .787
KM3225	32,0 1.260	20,0 .787	8,0 .314	10,0 .394	20,0 .787

Taper Specifications

KM™ — ISO 26622-1

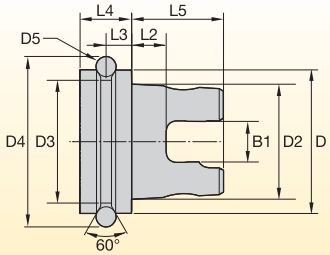

	D	D2	D3	D4	D5	L5	L2	L3	L4	B1
KM32TS	32,0 1.260	24,0 .945	29,0 1.142	36,45 1.435	3,5 0.138	20,0 0.787	8,0 1.102	4,9 0.193	10,0 0.394	9,0 0.354
KM40TS	40,0 1.575	30,0 1.181	37,0 1.457	44,45 1.750	3,5 0.138	25,0 0.984	11,0 0.433	5,89 0.232	12,0 0.472	10,1 0.398
KM50TS	50,0 1.969	40,0 1.575	42,7 1.681	59,4 2.339	7,0 0.276	32,0 1.260	12,0 0.472	8,9 0.350	16,0 .0630	14,1 0.555
KM63TS	63,0 2.480	50,0 1.969	55,7 2.193	72,4 2.850	7,0 0.276	40,0 1.575	18,0 0.709	9,9 0.390	18,0 0.709	16,1 0.634
KM80TS	80,0 3.150	64,0 2.520	72,7 2.862	89,4 3.520	7,0 .0276	45,0 1.772	18,5 0.728	11,0 0.433	22,0 0.866	20,1 0.791

NOTE: Valid for all KM styles including XMZ and ATC.

Taper Specifications

KM4X™

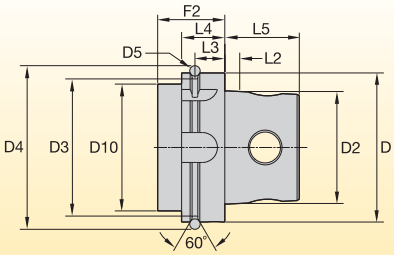

	D	D2	D3	D4	D5	D10 (max)	F2 (min)	L2	L3	L4	L5
KM4X63	63,0 2.480	48,0 1.890	55,0 2.165	72,2 2.843	7,0 .276	53,0 2.087	42,0 1.654	6,3 .248	18,0 .709	26,0 1.024	32,0 1.260
KM4X100	100,0 3.937	75,0 2.953	92,0 3.622	109,7 4.319	7,0 .276	85,0 3.346	45,0 1.772	10,0 .394	20,0 .787	29,0 1.142	50,0 1.969

NOTE: Valid for all KM styles including XMZ and ATC.

Taper Specifications

HSK — DIN 69893 Part 1, Form A

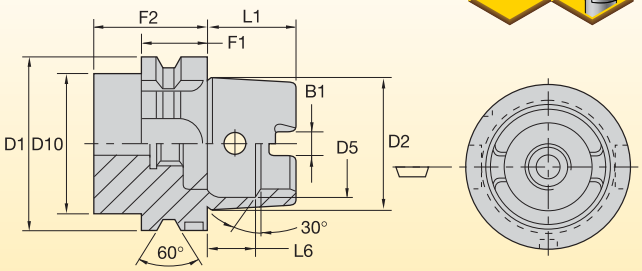

	D1 mm (h10)	D2 mm (ref)	D5 mm (h11)	D10 mm (max)	L1 mm (-0,2)	L6 mm (js10)	B1 mm (±0,04)	F1 mm (-0,1)	F2 mm (min)
40A	40	30	25,50	34	20	11,42	8,05	20	35
50A	50	38	32	42	25	14,13	10,53	26	42
63A	63	48	40	53	32	18,13	12,54	26	42
80A	80	60	50	67	40	22,85	16,04	26	42
100A	100	75	63	85	50	28,56	20,02	29	45

HSK — DIN 69893 Part 1, Form C

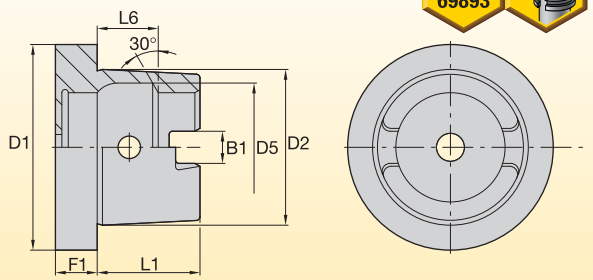

	D1 mm (h10)	D2 mm (ref)	D5 mm (h11)	L1 mm (-0,2)	L6 mm (js10)	B1 mm (±0,04)	F1 mm (-0,1)
32C	32	24	21	16	8,92	7,05	10
40C	40	30	25,50	20	11,42	8,05	10
50C	50	38	32	25	14,13	10,53	12,5
63C	63	48	40	32	18,13	12,54	12,5

HSK — DIN 69893 Part 5, Form E

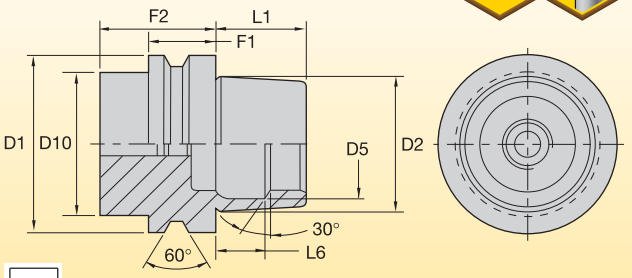

	D1 mm (h10)	D2 mm (ref)	D5 mm (h11)	D10 mm (max)	L1 mm (-0,2)	L6 mm (js10)	F1 mm (-0,1)	F2 mm (min)
40E	40	30	25,5	34	20	11,42	20	35
50E	50	38	32	42	25	14,13	26	42

HSK — DIN 69893 Part 1, Form F (with Pin)

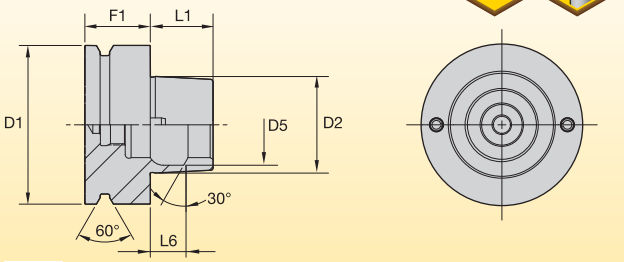

	D1 mm (h10)	D2 mm (ref)	D5 mm (h11)	L1 mm (-0,2)	L6 mm (js10)	F1 mm (-0,1)
63F (pin)	63	38	32	25	14,13	26
80F (pin)	80	48	40	32	18,13	26

BTKV — Taper Face

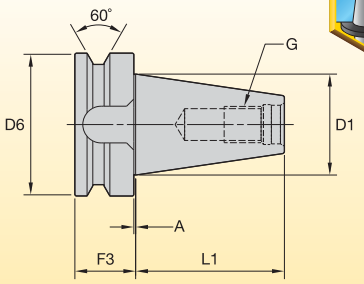

	D1	D6	L1	F3	A	G
40	44,45 (1.750)	63,00 (2.480)	65,40 (2.575)	27,00 (1.063)	1,00 (.039)	M16 thread
50	69,85 (2.750)	100,00 (3.937)	101,80 (4.008)	38,00 (1.496)	1,50 (.059)	M24 thread

CVKV — Taper Face

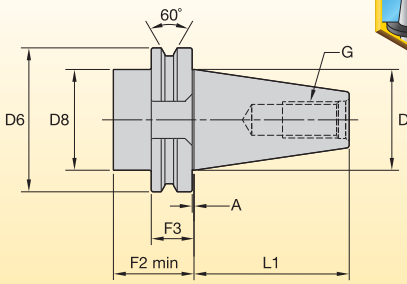

	D1	D6	D8	L1	F2	F3	A	G
40	44,45 (1.750)	63,05 (2.500)	44,45 (1.750)	68,25 (2.687)	35,00 (1.375)	19,05 (.750)	1,00 (.039)	5/8-11 thread
50	69,85 (2.750)	98,41 (3.875)	69,85 (2.750)	101,60 (4.000)	35,00 (1.375)	35,00 (1.375)	1,50 (.059)	1-8 thread

Taper Specifications

BT — JIS B6339

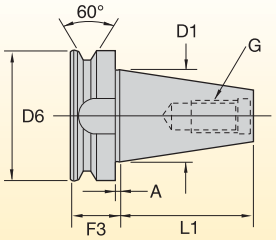

	D1	D6	L1	F3	A	G
30	31,75 (1.250)	46,00 (1.811)	48,40 (1.906)	22,00 (.866)	2,00 (.079)	M12 thread
35	38,10 (1.500)	53,00 (2.087)	56,50 (2.224)	24,00 (.945)	2,00 (.079)	M12 thread
40	44,45 (1.750)	63,00 (2.480)	65,40 (2.575)	27,00 (1.063)	2,00 (.079)	M16 thread
45	57,15 (2.250)	85,00 (3.346)	82,80 (3.260)	33,00 (1.299)	3,00 (.118)	M20 thread
50	69,85 (2.750)	100,00 (3.937)	101,80 (4.008)	38,00 (1.496)	3,00 (.118)	M24 thread

CAT (CV) — ANSI B5.50

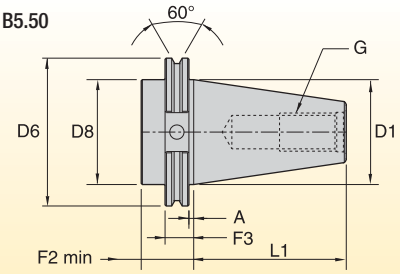

	D1	D6	D8	L1	F2	F3	A	G
30	31,75 (1.250)	46,02 (1.812)	31,75 (1.250)	47,63 (1.875)	35,00 (1.375)	19,05 (.750)	3,18 (.125)	1/2-13 thread
40	44,45 (1.750)	63,05 (2.500)	44,45 (1.750)	68,25 (2.687)	35,00 (1.375)	19,05 (.750)	3,18 (.125)	5/8-11 thread
45	57,15 (2.250)	82,50 (3.250)	57,15 (2.250)	82,55 (3.250)	35,00 (1.375)	19,05 (.750)	3,18 (.125)	3/4-10 thread
50	69,85 (2.750)	98,41 (3.875)	69,85 (2.750)	101,60 (4.000)	35,00 (1.375)	19,05 (.750)	3,18 (.125)	1-8 thread
60	107,95 (4.250)	139,70 (5.500)	107,95 (4.250)	161,93 (6.375)	38,10 (1.500)	19,05 (.750)	3,18 (.125)	1 1/-7 thread

DV — DIN 69871

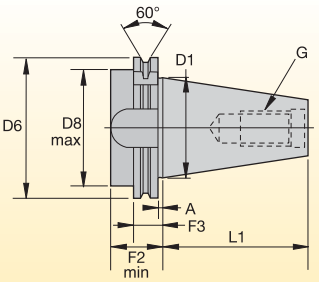

	D1	D6	D8 max	L1	F2 min	F3	A	G
30	31,75 (1.250)	49,95 (1.967)	45,00 (1.772)	47,65 (1.876)	35,00 (1.378)	19,05 (.750)	3,20 (.126)	M12 thread
40	44,45 (1.750)	63,00 (2.480)	50,00 (1.969)	68,25 (2.687)	35,00 (1.378)	19,05 (.750)	3,20 (.126)	M16 thread
45	57,15 (2.250)	82,00 (3.228)	63,00 (2.480)	82,55 (3.250)	35,00 (1.378)	19,05 (.750)	3,20 (.126)	M20 thread
50	69,85 (2.750)	97,45 (3.827)	80,00 (3.150)	101,60 (4.000)	35,00 (1.378)	19,05 (.750)	3,20 (.126)	M24 thread

Form B — Flange Coolant Entry Ports

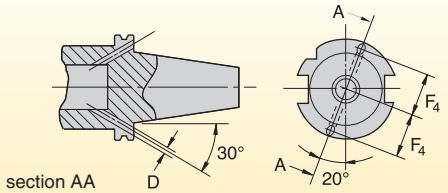

	D	F4 ±0.004
30	4,00 (.157)	21,00 (.827)
40	4,00 (.157)	27,00 (1.063)
45	5,00 (.197)	35,00 (1.378)
50	6,00 (.236)	42,00 (1.654)

QC — ERICKSON™ Quick Change

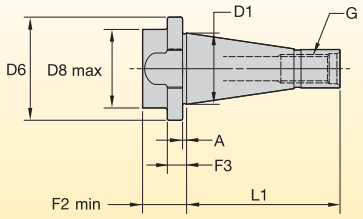

	D1	D6	D8 max	L1	F2 min	F3	A	G
30	31,75 (1.250)	46,03 (1.812)	35,05 (1.380)	68,33 (2.690)	19,81 (.780)	10,69 (.421)	1,96 (.077)	1/2" - 13 UNC - 2B
40	44,45 (1.750)	63,50 (2.500)	50,80 (2.000)	93,73 (3.690)	20,83 (.820)	9,88 (.389)	1,93 (.076)	5/8" - 11 UNC - 2B
50	69,85 (2.750)	88,90 (3.500)	73,66 (2.900)	127,00 (5.000)	30,73 (1.210)	15,09 (.594)	3,58 (.141)	1" - 8 UNC - 2B

R8 — Bridgeport

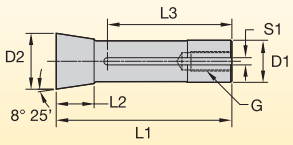

	D1	D2	L1	L2	L3	S1	G
R8	.469	1.241	4.000	.938	2.750	.157	7/16-20 UNF - 2B

Shank Specifications

VDI — DIN 69880

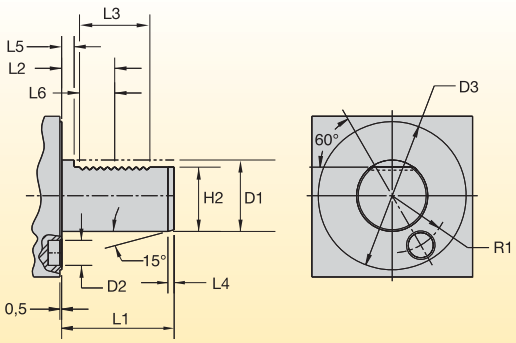

	D1	D2	D3	L1	L2	L3	L4	L5	L6	H2	R1
30	30,00 1.181	14,00 0.551	68,00 2.677	55,00 2.165	29,70 1.169	40,00 1.575	2,00 0.079	7,00 0.276	20,00 0.787	27,00 1.063	25,00 0.984
40	40,00 1.575	14,00 0.551	83,00 3.268	63,00 2.480	29,70 1.169	40,00 1.575	3,00 0.118	7,00 0.276	20,00 0.787	36,00 1.417	32,00 1.260
50	50,00 1.969	16,00 0.630	98,00 3.858	78,00 3.071	35,70 1.406	48,00 1.890	3,00 0.118	8,00 0.315	24,00 0.945	45,00 1.772	37,00 1.457
60	60,00 2.362	16,00 0.630	123,00 4.843	94,00 3.701	43,70 1.720	56,00 2.205	4,00 0.157	10,00 0.394	28,00 1.102	55,00 2.165	48,00 1.890

KM4X™

The Latest Innovation in Spindle Interface Technology!

Dramatically increase your metal removal rates when machining high-temperature alloys!

- Run jobs at significantly faster feeds and speeds than is achievable with other spindle interfaces.
- Unique use of clamping force and interference level increases clamping capability 2 to 3 times.
- You experience lower cost of ownership, increased throughput, and superior results.

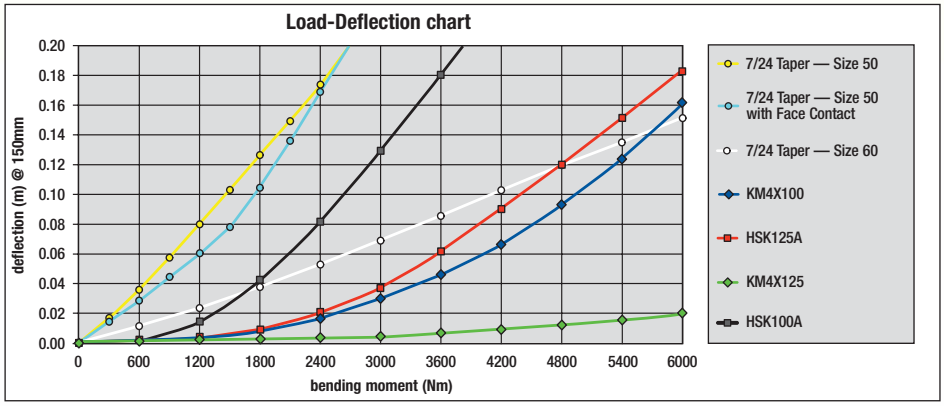

*To learn more, **scan here**.*
For instructions on how to scan, please see page xxxiii.

Visit **www.kennametal.com** or contact your local Authorized Kennametal Distributor.

www.kennametal.com

KENNAMETAL®

The Importance of a Strong Connection

Many component materials are switching to lighter, high-strength materials, like titanium, to increase fuel efficiency. To save time and money, machinists are challenged to maximize metal removal rates at low cutting speeds and considerably higher cutting forces. Machine tool builders must also provide greater stiffness and damping in their spindles to minimize undesirable vibrations that deteriorate tool life and part quality.

Though these advances contribute to greater productivity, the weakest point is often the spindle connection itself, which needs high torque and must overcome high-bending applications.

Our response to this traditionally weak point has been the proven KM™ system, and now we are introducing the next generation KM4X™. The combination of the KM4X's high clamping force and interference level lead to a robust connection and extremely high stiffness and bending load capacity for unmatched performance in titanium machining.

Current Spindle Connections

To fulfill the increasing demand for high productivity, an important element to consider is the tool/spindle connection. This interface must be able to withstand high loads and maintain rigidity throughout the machining process. In most cases, the connection determines how much material can be removed on a given operation until high tool deflection or chatter result.

High-performance machining is accomplished using high feeds and depths of cut. Because of advances in cutting tools, there is a need for spindle connections that utilize available power.

Several different types of spindle connections were developed and/or optimized over the last few decades. Due to its strong cost/benefit position, the 7/24 ISO taper became one of the most popular systems on the market. It has been successfully used in many applications, but its accuracy and high-speed limitations prevent it from becoming a more advanced and productive system.

The advent of face contact represented a major step over the standard 7/24 taper. Combining face contact with a 7/24 solid taper provides higher accuracy. However, this also presents some disadvantages. Loss of stiffness at higher speeds or high side loads are some of the major flaws apparent in this system. Most of these tools are solid, and the spindles have relatively low clamping force.

This results in limited connection stiffness, as radial interference needs to be minimal. The required tolerances to achieve consistent face contact are thus very tight, leading to high manufacturing costs.

Choosing What's Right

With more materials that are tougher to machine and require considerably higher cutting forces from the machine tool, choosing the spindle interface wisely to maximize cutting edge performance is key to success.

The KM spindle connections greatly outperform the conventional 7/24 steep taper and its face taper contact derivatives HSK and PSC systems. KM4X is the best large, heavy-duty spindle connection for rigidity because it has superb balance between bending and torsion capabilities from the machine tool.

7/24 ISO Taper

- One surface contact.
- Relatively low stiffness.
- Possible runout due to taper fitment.
- Low axial accuracy.

7/24 Taper Face Contact

- Two surface contact.
- Higher static and dynamic stiffness.
- Higher axial and radial accuracy.
- Rigid system.

HSK

- Two surface contact.
- Higher axial and radial accuracy.
- Less mass — faster quick change and higher speeds.
- Higher stiffness than 7/24 tapers.

KMTS (ISO)

- Three surface contact.
- Superior static and dynamic stiffness.
- Static and rotating applications.
- Higher speed.
- Higher stiffness than HSK and 7/24 tapers.

KM4X

- Three surface contact.
- Superior static and dynamic stiffness.
- Static and rotating applications.
- Highest maximum speed.
- ISO (HSK) Gripper.

KM4X™ — The Next Generation Spindle Connection System

As a global tooling supplier and a true customer support partner, we recognize the need to offer tooling products for all spindle interfaces and make available solutions to provide the best cutting edges to gain maximum productivity at the spindle system connection.

KM4X is the latest version of the KM™ spindle interface targeted at heavy-duty machining operations and is a top choice for machining large, structural tough-to-machine materials like titanium for the aerospace industry.

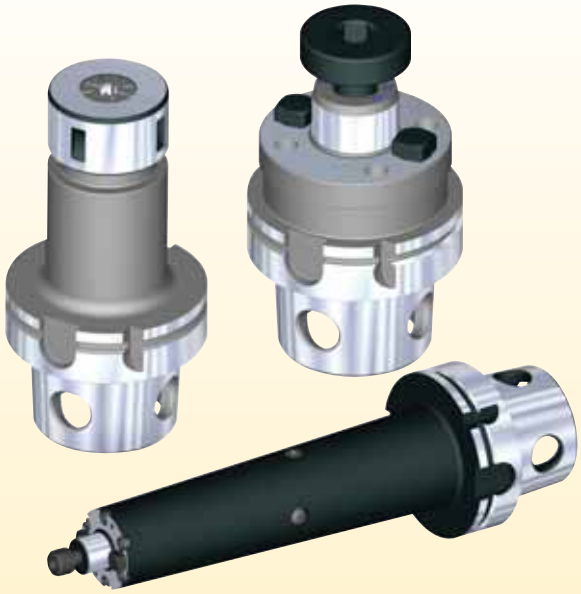

The Latest Innovation in Spindle Interface Technology

- KM4X offers the most rigid connection able to withstand extremely high bending due to a combination of high interference and high clamping forces.
- KM4X provides 3x more bending capacity than comparable face contact systems.
- KM is the only connection that maintains stiffness at elevated rotational speeds and is suitable for a range of applications from low speeds with high torque to very high spindle speeds with low torque.
- KM4X maintains a better balance between bending and torsion capabilities.
- The ability to retrofit KM4X to an existing machine tool offers the added advantage of increasing throughput.
- Heavy-duty, rigid configuration with evenly distributed clamping force.
- Simple design enables front-loaded spindle configuration.
- Balanced-by-design for high spindle speed capacity.

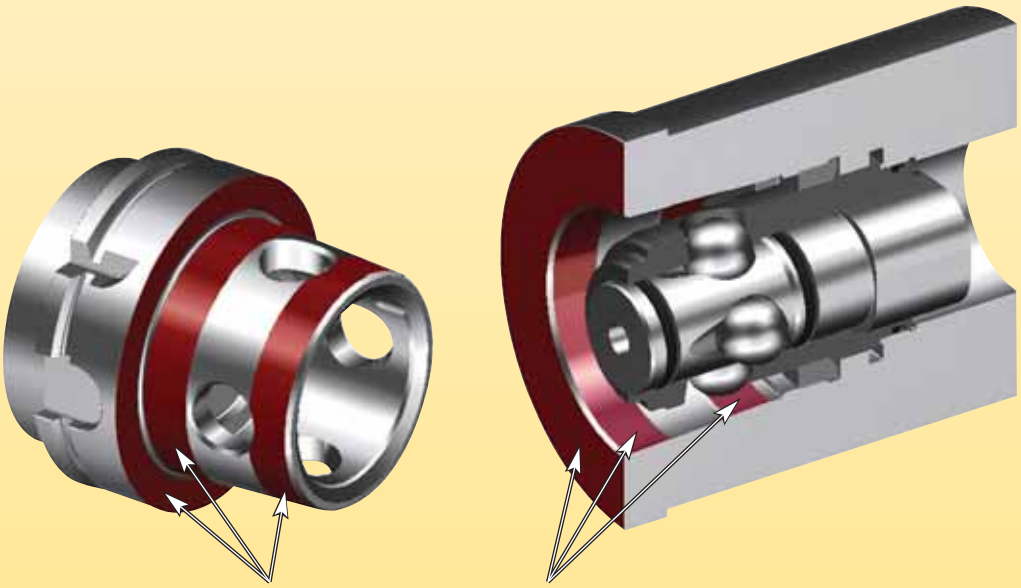

KM4X three-surface contact for improved stability and accuracy.
Optimized clamping force distribution and interference fit provides higher stiffness.

Why Bending Load Capacity Is Important

When machining tough materials like titanium, cutting speeds are relatively low due to thermal effects on cutting tools. Over the years, machine tool builders responded to this issue by improving stiffness and damping on spindles and machine structures. Spindles have been designed with abundant torque at low rotational speeds. Nevertheless, the spindle connection has remained the weak link in the system.

The spindle connection must provide torque and bending load capacity compatible with the machine tool specifications and the requirements for higher productivity. It becomes obvious that in end-milling applications where the projection lengths are typically greater, the limiting factor is the bending load capacity of the spindle interface.

The lines on the chart to the right represent the load capacity of HSK, PSC, and KM4X. The shaded areas represent the typical requirements for heavy-duty applications in various machining processes. KM4X is the only system that can deliver the torque and bending capacity required for achieving high-performance machining. Some systems may be able to transmit a considerable amounts of torque, but the cutting forces also generate bending moments that exceed the interface's limits before torque limits are exceeded.

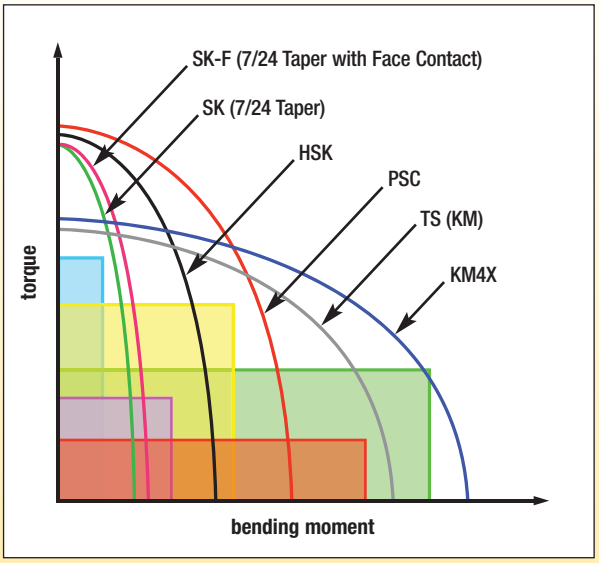

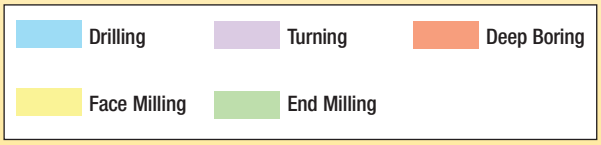

IMPORTANT
Information shown on the following charts was developed exclusively for use with KM tooling in static conditions. Do not use for any other tooling system because the results will not apply. To account for cutting force fluctuations in dynamic conditions, a reduction of 20–30% should be applied to the loads shown in charts.

Chart shows load-deflection comparison of steep taper with and without face contact — HSK and KM4X.

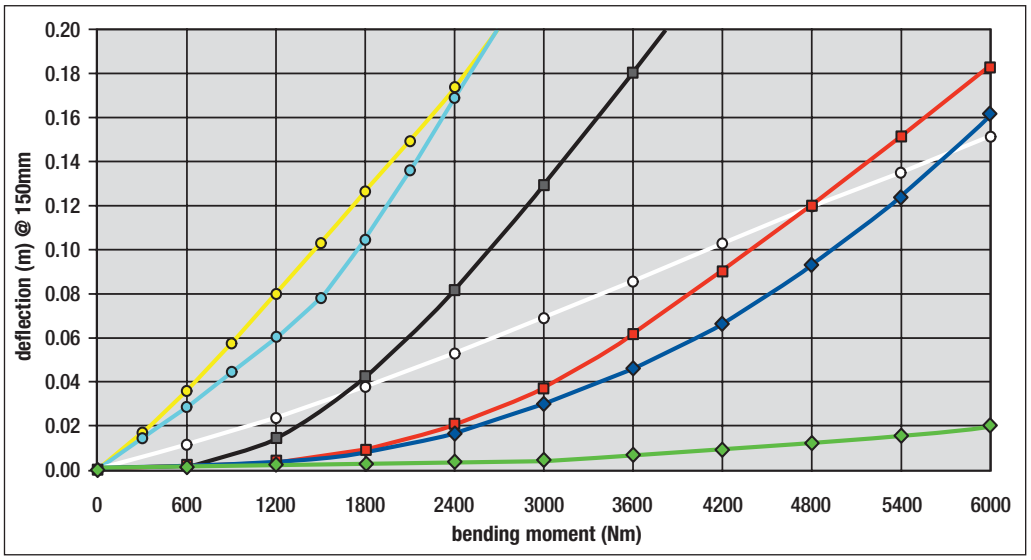

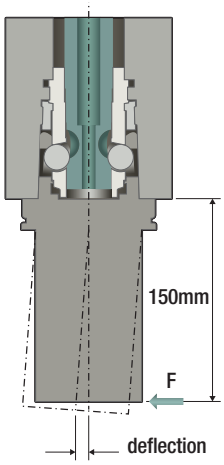

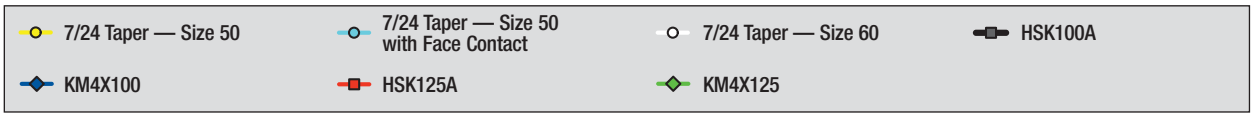

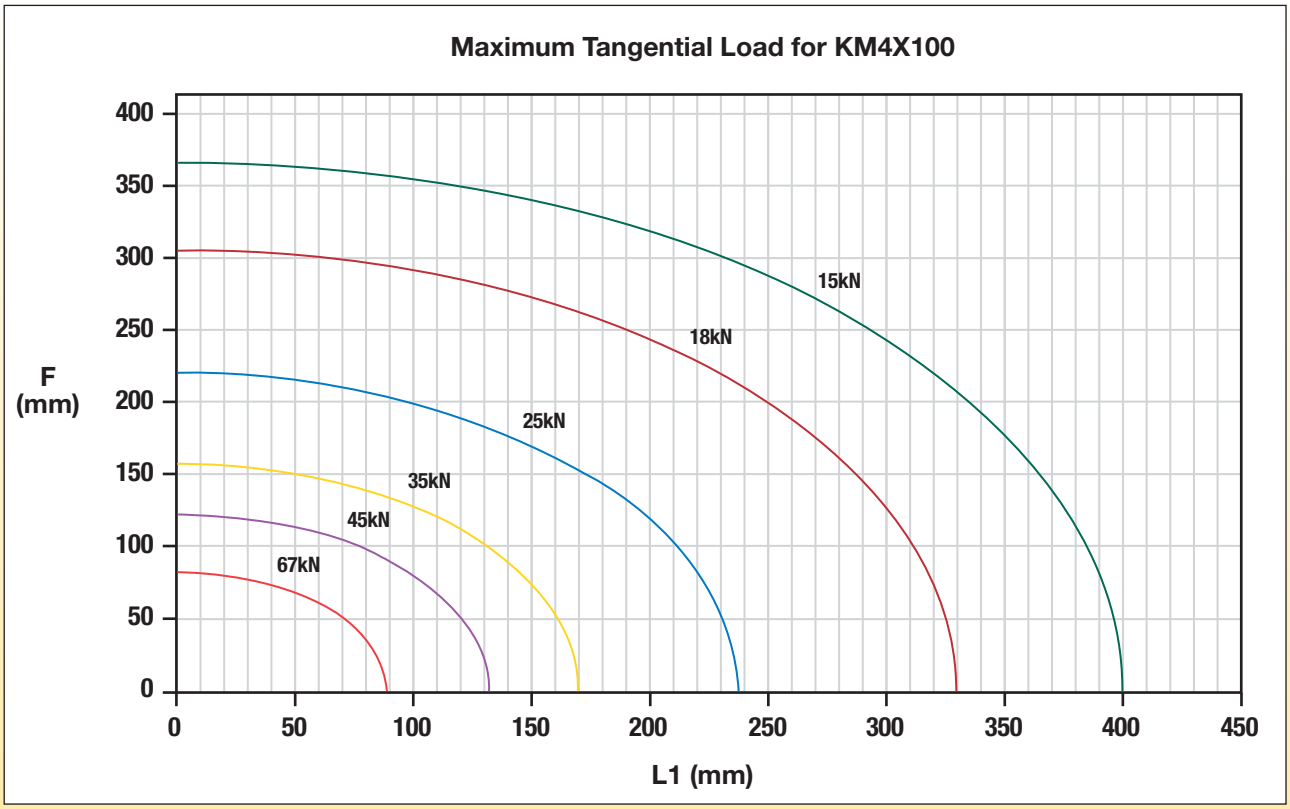

The KM4X system is the best large, heavy-duty connection. A weak connection can fail to deliver the desired cutting edge performance. KM4X superior rigidity equals maximum productivity.

IMPORTANT
Information shown on the following charts was developed exclusively for use with KM tooling in static conditions. Do not use for any other tooling system because the results will not apply. To account for cutting force fluctuations in dynamic conditions, a reduction of 20–30% should be applied to the loads shown in charts.

The KM Coupling

The KM Quick Change Clamping System is the first step in achieving maximum machine output. Please refer to the Kennametal Machine Utilization Strategy for more information on how we can help you increase your machine throughput. The KM joint achieves rigidity and stiffness by combining unique design elements in both the shank of the tool and the clamping mechanism. The KM joint was developed as a system and takes full advantage of both the tool shank and the mechanism to obtain maximum benefits from the space utilized.

Rigidity

All KM tooling is designed around a short 10:1 tapered shank. Extensive testing of many different lengths, angles, and interference levels provided the optimum combination of dimensions with regard to maximum stiffness. The taper is self-centering, promoting easy tool loading in both manual and automatic applications.

The three-zone contact and the ball track clamping mechanism produces a coupling that closely approaches the ultimate rigidity of a solid piece.

Face and Taper Contact

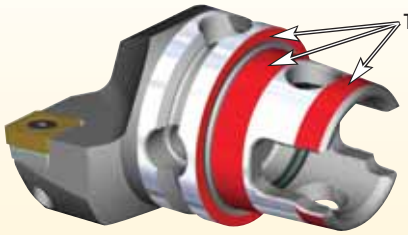

KM tooling is designed to have simultaneous taper and face contact. Previous efforts to achieve this were concentrated on steep taper applications. However, due to the relatively large angle of the taper, extremely tight tolerances are required on the gage diameters of both the tool and receptacle. The KM taper was designed to avoid these tight tolerances by selecting shallower taper angles that enable elastic deformation of both the taper shank and receptacle during clamping. It also permits larger interference levels* to be used while still achieving taper and face contact during clamping. These interference levels, when combined with the proper clamping force, provide superior static and dynamic stiffness. The system's interference capability enables the use of lower tolerance levels for gage diameters.

The taper and face contact feature provides a radial and axial repeatability of ±2,5 µm (±.0001") for a specific cutting unit in a specific clamping unit. When more than one unit is utilized, the manufacturing and component tolerances of each must be considered. Pre-gaging cutting units before they are used enables the deviations of each tool tip location to be recorded. These deviations can be compensated for by the machine tool control offsets. Checking for deviations prior to use means the first part manufactured will be a good part.

*The difference between the gage diameters of the receptacle and the taper shank.

Clamping Mechanism

The KM clamping mechanism is housed inside of the taper shank, which contains two angled holes that function as ball tracks. A cylindrical ball canister fits inside of the taper shank, where wedge shaped forms on a central lock rod force two hardened steel balls outward. The steel balls interact with the angled holes in the tapered shank to produce clamping force. The combination of the angle in the taper shank, the angle of the canister holes, and the lock rod angle produce a measured mechanical advantage that varies between 3.5:1–7:1. The standard manual side activation mechanism has a mechanical advantage of 3.5:1 and fits into the system size diameter.

Locking Sequence

The clamping sequence starts by inserting the cutting unit into the female taper of the clamping unit. The cutting unit first makes contact at a standoff from the face of approximately 0,25mm (.010"). The cutting unit advances until the gage face makes contact with the clamping unit face, where a small amount of elastic deformation takes place at the front of the female taper as locking force is applied. The final amount of torque applied enables the tail of the cutting unit to clamp securely between the steel balls and the clamping unit inside diameter.

Sealed Coolant

Sealed through-the-tool coolant is offered on all standard KM tooling and clamping units. The coolant is sealed using O-rings in both the cutting units and clamping units. This feature ensures that coolant is directed as close as possible to the cutting edge while preventing contaminants from entering the clamping mechanism. Standard Viton® O-rings are utilized on KM.

Fail-Safe Tool Orientation

A unique feature of KM clamping is the ability to ensure that the KM cutting unit can only be installed in one orientation. The direction of this orientation feature can be changed within the clamping unit. To allow greater flexibility, standard KM clamping units are shipped without this feature installed. For more details on this feature, refer to the KM operating instructions section.

Metric Slotted Pins:

- KM32TS — 2,5mm x 4mm Long
- KM40TS — 3mm x 6mm Long
- KM50TS — 4mm x 8mm Long
- KM63TS — 5mm x 10mm Long
- KM80TS — 5mm x 10mm Long
- KM63XMZ — 5mm x 10mm Long
- KM80ATC — 5mm x 10mm Long

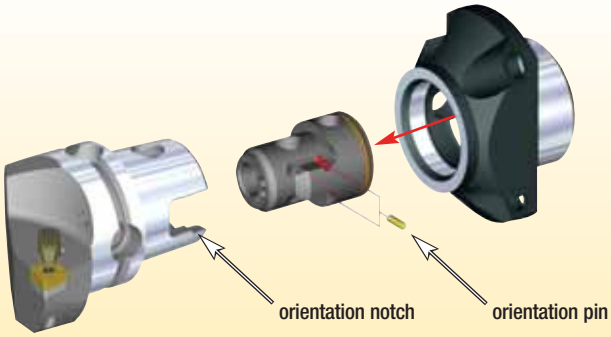

Accuracy and Repeatability

Accuracy and repeatability of the coupling are shown in the table below. Accuracy is measured over a gage insert in different cutting units changed in and out of a clamping unit. Accuracy will decrease with inserts of varying tolerances and nose radii. Station-to-station accuracy on a turret requires that all clamping units be set in the same position on the machine tool mechanically or that variations are recorded as offsets in the machine control. Repeatability is measured over the nose radius of a cutting unit through many cycles of changing the cutting unit in and out of a clamping unit.

	accuracy	repeatability
axial	0,13mm (+/- .005")	0,0025mm (+/- .0001")
radial	0,13mm (+/- .005")	0,0025mm (+/- .0001")
cutting edge height	0,4mm (+/- .016")	0,025mm (+/- .001")

Summary

KM coupling offers a very rigid joint with a high degree of repeatability while maintaining a compact envelope. This permits a high degree of versatility without sacrificing cutting performance.

HSK Quick-Reference Identification

HSK hollow-stub taper shanks are a widely used DIN standard for machine tools. HSK tools have a simultaneous 1:10 taper, which generates two surface contact areas: face and taper. Compared with traditional steep-taper shanks, HSK shanks are shorter, hollow, and clamp from the inside. They also incorporate drive keys that engage milled key-slots in machine spindles and offer higher static and dynamic stiffness than standard steep taper tooling.

HSK tooling includes seven toolholder shank forms: A, B, C, D, E, F, and T. Various machine-spindle receivers are available for each. However, the choice of form depends on application requirements such as torque and spindle speed.

HSK-A
for general-machining service

HSK-B
greater flange support than form A
for heavier work

Form A

Form A for automatic tool change is the most common shank, typically used on new machining centers and for general service. Form A has a drive slot in the small end of the tapered shank and features coolant through the center, using a coolant tube thread mount inside the shank cavity. In many applications, wrench access holes are provided through the taper as an option for manual clamping and automatic tool change shanks. Form A shanks have mounting holes for an electronic chip.

There are eight different sizes of form A ranging from 32–160mm (1.260–6.299") flange diameter.

Form B

Form B is also for automatic tool change. It is similar in appearance to form A but dimensionally different. Form B provides greater flange support for heavy machining, even though its taper shank size is smaller than form A. This style of shanks have drive slots in the flange and drive keys in the taper. Coolant for form B is fed through ports in the flange. Mounting holes for an electronic chip are also a feature of form B.

For form B there are seven different shank sizes from 40–160mm (1.575–6.299") flange diameter.

HSK-C
similar to form A but for manual tool
change applications

HSK-D
similar to form B but for manual tool
change applications

Forms C and D

Forms C and D for manual tool changes are variations of forms A and B, but the gripper groove and chip holes are eliminated. These two forms always have their access holes through the taper for manual clamping. These manual forms are typically used on transfer lines and non-rotating applications for NC lathes.

There are six different shank sizes for form C ranging from 32–100mm (1.260–3.937") flange diameter. Form D has five different shank sizes from 40–100mm (1.575–3.937") flange diameter.

(continued)

HSK Quick-Reference Identification *(continued)*

HSK-E
balanced-by-design for higher speeds

HSK-F
balanced-by-design with greater flange support for higher speeds

HSK-T

Forms E and F

Forms E and F with automatic tool change are also variations of forms A and B. These forms are intended for high-speed machining. Design features, such as drive slots, the orientation notch, and chip holes, have been removed to help eliminate imbalance. As a result, these forms are driven by the locking taper and are suitable only for light machining applications such as high-speed metalcutting and woodworking machines.

Form E offers five different shank sizes ranging from 25–63mm (.984–2.480") flange diameter. There are three shank sizes for form F from 50–80mm (1.969–3.150") diameter on the flange.

Form T

Form T shanks are similar to form A, but with tighter key ways for turning. This gives form T improved repeatability over form A. These shanks have new centerline technology for variance and high productivity. They are also available in a wide range of standard toolholders.

HSK Primary Offering

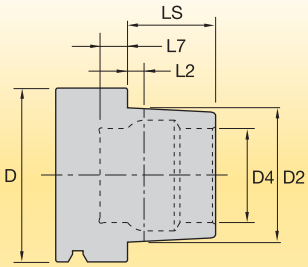

flange diameter D										
forms A and T	form B	form C	form D	form E	form F	D2 mm	D4 mm	LS mm	L2 mm	L7 mm
-	-	-	-	25	-	19	14	13	2,5	6
32	40	32	40	32	-	24	17	16	3,2	8
40	50	40	50	40	50	30	21	20	4	8
50	63	50	63	50	63	38	26	25	5	10
63	80	63	80	63	80	48	34	32	6,3	10
80	100	80	100	-	-	60	42	40	8	12,5
100	125	100	-	-	-	75	53	50	10	12,5
125	160	-	-	-	-	95	67	63	12,5	16
160	-	-	-	-	-	120	85	80	16	16

Kennametal primary offering — Secondary styles available upon request

7/24 Taper Face Contact V-Flange — Tooling to Fit the BIG-PLUS™ Spindle

The 7/24 Taper Face Contact Spindle Interface, is being found on machining centers and multitasking machines. The basic principle of this system takes the standard 7/24 steep-taper tool and adds material to the back face of the toolholder flange as well as to the front face of the spindle. This is controlled so that the two parts have both face and taper contact when locked into position. The distinctive features of the system are the lead-in chamfers on the drive slots and ground back V-flange. The surface contact creates a system with higher static and dynamic stiffness compared to a regular 7/24 taper and increased axial and radial accuracy.

Capable of being utilized in a variety of machining applications ranging from low-speed, heavy milling applications to high speeds greater than 20,000 RPM. The systems accuracy, repeatability, and stability should be equal or greater to the performance of current equivalent Taper Face tooling on the market in all applications.

Technology

With the Taper Face System, toolholders are axially supported on the taper and flange face, which brings about higher rigidity and precision than a conventional 7/24 toolholder. The system utilizes elastic deformation of the machine spindle to achieve simultaneous fitting of both the taper and flange face. Although the tapers are fit prior to clamping the mechanism, the faces are not yet secured because of a small amount of clearance between them. When the toolholder is pulled in by the drawbar mechanism, the machine spindle expands by elastic deformation and the faces are fit, completing the simultaneous fit between both taper and face. This synchronized fit prevents additional axial displacement of the taper providing high accuracy and superior surface finish in operations such as face milling, compared to the industry standard 7/24 V-flange.

Taper face tool's axial position is maintained even at high rotational speed.

Offering

Kennametal supports both the CAT (CV) ANSI B5.50 and BT JIS B6339 versions in 40 and 50 taper sizes:

- Two surface contact.
- Higher static and dynamic stiffness.
- Higher axial and radial accuracy.
- Rigid system.

- CVKV40
- CVKV50

- BTKV40
- BTKV50

Clamping Mechanism

In some cases, standard 7/24 steep-taper tooling can be used in a face contact 7/24 taper spindle. However, the combination does not offer the same stability or advantages of face contact. As a caution, some spindles have a safety switch that shuts the spindle down if face contact is not achieved. In these cases, tools will need taper face contact for the spindle to operate.

Similar to all interfaces with face contact, special care should be taken regarding the cleanliness of the mating faces as high contact pressures are present. Adequate filtration systems for coolant must be used.

Locking Principle

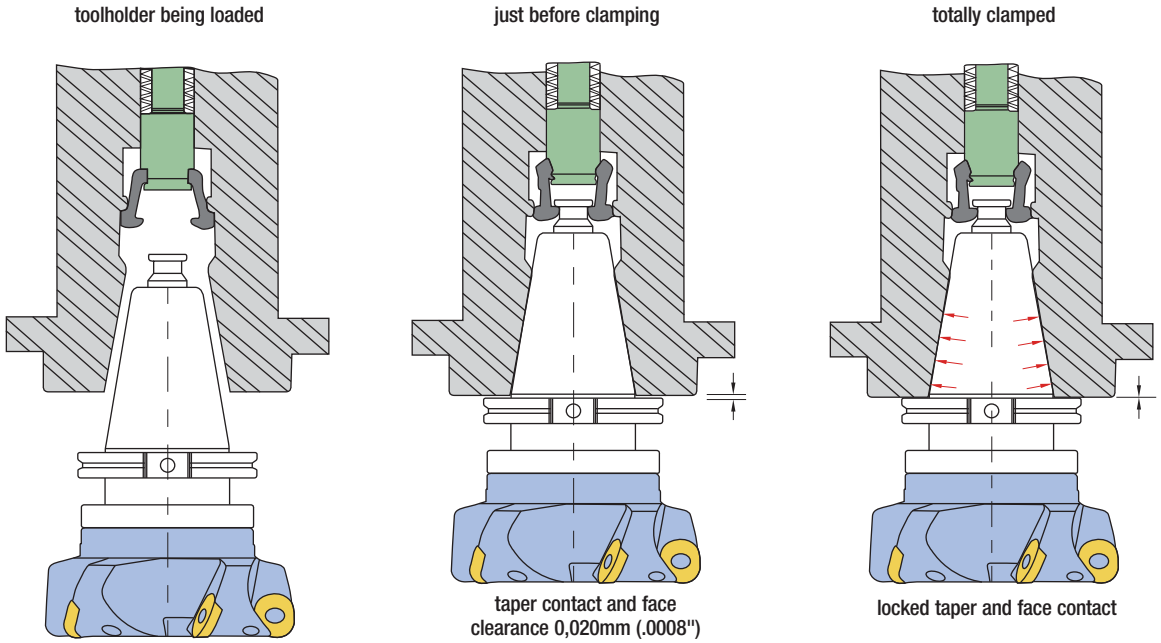

Steep Taper V-Flange

Steep taper Form B coolant

Taper Size

Taper size should be chosen with realistic considerations. When selecting cutting parameters, keep in mind that a machine with a 30 taper spindle will not achieve the same heavy cuts or use cutters as large those on a 50 taper machine.

Pull-Back System

When troubleshooting a problem, assume that the toolholder is at fault is not the correct course of action. The spring pack, drawbar, gripper, and retention knob are major components for the successful operation of a machine tool because wear or breakage of these parts is a major concern.

- **Spring pack —** Can become weak or out of adjustment. This can cause chatter during a milling operation, which causes damage to the adapter taper, spindle taper, cutter, or workpiece.
- **Gripper fingers —** If worn, they may not grip the retention knob correctly, enabling the adapter to move, resulting in chatter and damage to the adapter.
- **Retention knob —** A worn or incorrect retention knob will not enable proper gripping for pull back on the taper. This is a very serious safety hazard due to the movement of the adapter. Using an improper knob may result in a lack of any detectable gripping force.

Form B Coolant

Spindles are now running at higher rates — quickly burning seals, making it difficult to seal coolant as it passes through the drawbar. One option is to direct the coolant around the spindle bearings and enter through the spindle face and toolholder flange.

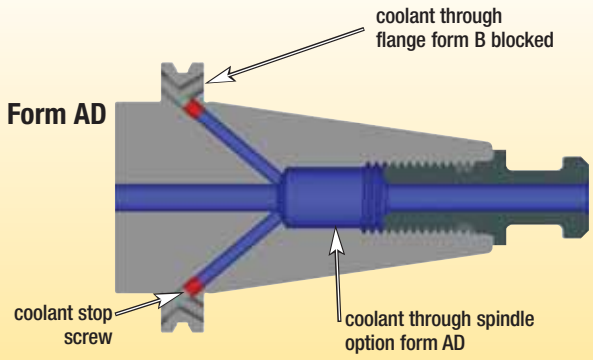

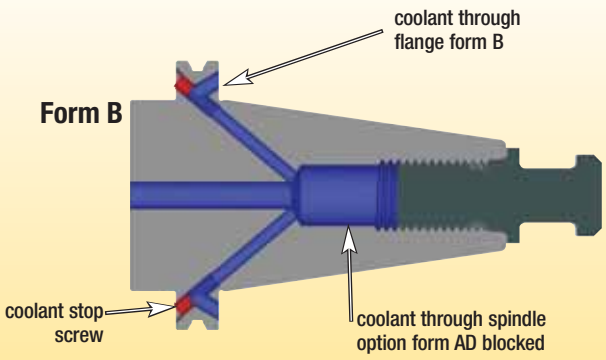

Kennametal™ toolholders are positioned in the AD coolant form with self-sealing, nylon-coated screws. The coolant screws are designed to completely seal the tool and prevent coolant leakage under pressures up to 1500 psi. However, if form B coolant is desired, the coolant stop screws must be backed out into the form B position.

IMPORTANT
When choosing a desired coolant form, the correct retention knob should be used in conjunction with the coolant form applied.

Form B toolholders can be converted back through the drawbar form AD by simply threading the coolant stop screw and stopping below the flange coolant entry hole. Changing coolant form can be achieved many times before it is necessary to replace the coolant stop screw.

All form B capable tooling is supplied with a label designating the required screw components for each steep taper size and information necessary for selecting a wrench to adjust the coolant stop screws.

Form AD	✓				
Form B			40	(2x) MS2221S	2,5mm
			50	(2x) MS1296S	3mm

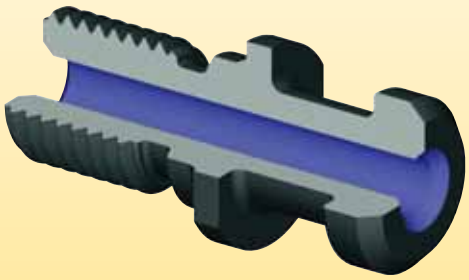

Form AD
(through-coolant hole)

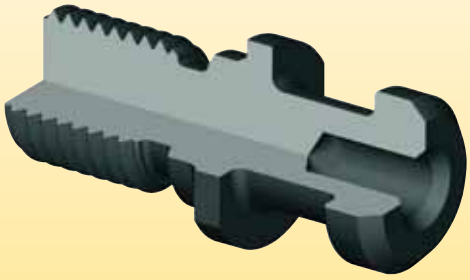

Form B
(no hole through or half hole)

Manual Clamping System

Characteristics

- KM Manual Quick Change tooling is the most economical way to reduce downtime for setup and tool change and is an important first step toward further automation. The machine tool builder or the customer can easily install KM Manual Quick Change tooling.
- All KM manual clamping units require approximately three turns of the activation screw and a specified amount of torque to lock the cutting tool.
- The KM Manual Quick Change clamping mechanism is rigid and compact, with an easily accessible activation screw. The high mechanical advantage of the ball track makes it simple to apply the required locking force.
- All KM Manual Quick Change clamping units accept external and internal cutting tools. Right- or left-hand tooling can be used interchangeably, and cutting tools can be inverted if required. KM Manual Quick Change clamping units support through-the-tool coolant.

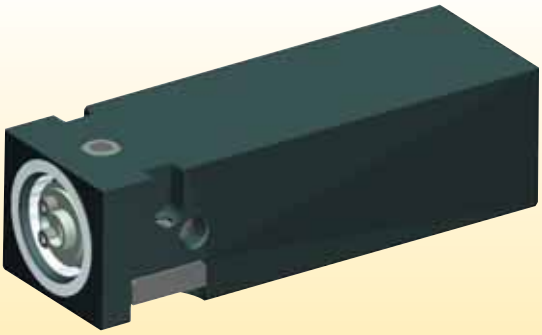

- The KM Manual Quick Change clamping mechanism can adapt to a wide variety of machine tool mounting configurations including flange mounts, square, round, and VDI shanks.

KM-LOC™ Clamping System

KM-LOC is an evolutionary step from the conventional KM manual clamping system, the KM-LOC device employs a cam and a pre-loaded disk spring pack to provide positive, stop-to-stop locking and unlocking in only 140º of movement. The spring pack supplies the correct clamping force while the cam permits quick and easy clamping/unclamping in less than one turn, and without using a torque wrench. The KM-LOC clamping device is compact to adapt to a wide variety of machine tool mounting configurations, including flange mounts, square, round, and VDI shanks. The new KM-LOC clamping device offers all the features and benefits of our industry-proven modular KM Quick Change Tooling System and reduces the time required for manual tool changes.

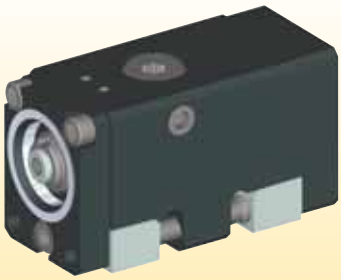

KM-LOC II™ Clamping System

The KM-LOC II clamping device is the latest addition to the Kennametal KM modular quick-change tooling family. An evolutionary step from the conventional KM manual clamping system, the KM-LOC II employs a cam and a preloaded disc spring pack to provide positive, stop-to-stop locking and unlocking in only 145° of movement.

The spring pack supplies the correct clamping force without using a torque wrench, while the cam permits quick and easy clamping/unclamping in less than one half of a turn. The KM-LOC II clamping device is compact to adapt to a wide variety of machine tool mounting configurations including flange mounts, square, round, and VDI shanks.

The KM-LOC II is capable of handling through-the-tool coolant pressure of 100 bar (1500 psi), and the design permits lubrication of internal components without disassembly. The design also enables the external installation of an orientation screw that restricts the cutting tool to a single orientation.

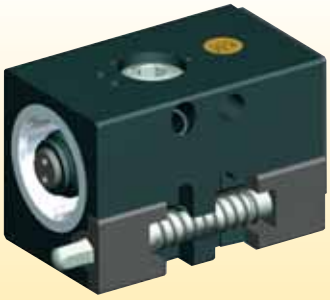

The latest KM-LOC II clamping device offers all of the features and benefits of our industry-proven modular KM Quick Change Tooling System and reduces the time required for manual tool changes.

Rapid Clamping System

Characteristics

KM Rapid is a compact quick-change clamping system providing outstanding repeatability while, at the same time, allowing fast manual locking and unlocking. KM cutting units are locked and unlocked with only a 115º turn of the actuation cam with no torque wrench required for clamping and unclamping. A stop pin limits the angle of rotation, and actuation is available from the side only.

The KM Rapid, with internal through-the-tool coolant capabilities, is best used in stationary applications on turning centers in high-volume production.

KM Rapid permits the external installation of an orientation screw to restrict the clamping unit to accept the cutting unit in only one orientation.

KM Rapid offers two main standard styles:

- Flange mount holders, fastening with four socket head cap screws and an additional orientation pin, can be used on turrets axially or radially.
- VDI shank tool holders, according to DIN 69880, in axial and right-angle styles for I.D. and O.D. turning applications.

Rapid Plus Clamping System

Characteristics

The KM Rapid Plus clamping system provides approximately 20% more locating face force versus the KM Rapid. It is designed for retrofitting in dedicated applications enabling cutting units to be locked and unlocked with only a 180º turn of the actuation cam. Actuation is available from the top only.

The Rapid Plus cartridge design allows use in smaller but slightly longer receivers, such as Multifix™ and Parat™ adapters.

Automatic Clamping System • Spring-Pack Activated

Characteristics

Automatic KM clamping systems enable tools to be locked or unlocked with the push of a button by the machine operator or changed automatically by the machine tool. These units also allow tools to be changed quickly and provide a high level of automation at a moderate cost.

Operation

The pull on the lock rod for the automatic KM clamping unit is provided by disc springs that are an integral part of the clamping unit. Release is accomplished by pushing on the back of the clamping unit with a hydraulic cylinder mounted on the turret assembly. Many machine tool builders design and build the turrets for their machines to be equipped with the KM Automatic Clamping Units.

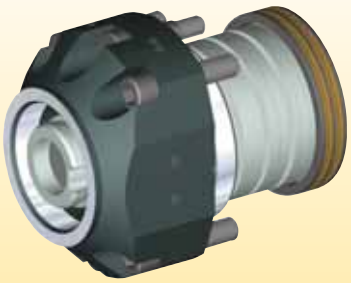

KM™ Manual Clamping Units

KM Manual clamping units require a torque wrench to operate. Using the proper torque wrench value is critical. Tighter is not better because over tightening can cause damage.

The specific operating torque of the KM manual clamping units is listed on each unit.

The KM connection must be kept clean and free from nicks and burrs. KM plugs are available to ensure cleanliness when a cutting unit is not engaged in the clamping unit.

When a KM head is unlocked, the head will bump-off. KM's 10:1 taper is self-locking, and therefore, requires a mechanical release. This is accomplished within the design of the KM System and does not require operator intervention.

After the head has been released, you will need to turn the torque screw another 3/4–1-1/2 turns. This rotation will feel free of resistance. When the free turning motion stops, the head can be pulled from the clamping unit. Do not turn the torque screw further, as damage can occur to the lockrod and/or bump-off pin.

KM Manual Clamping System • Single-Pin Design

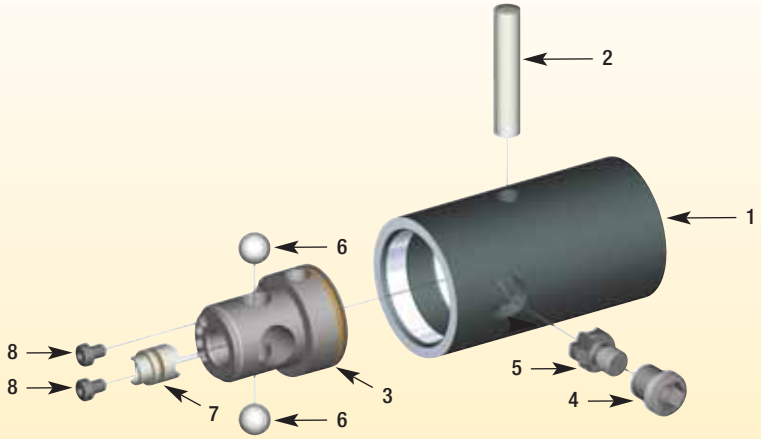

KM Manual Clamping Components • Functional Definitions

1. Clamping Unit Body
- Primary component of the clamping unit assembly, less additional hardware.

2. Canister Pin
- Secures ball canister to clamping unit body.

3. Pin Canister
- Main component of KM clamping mechanism holds and locates the locking balls and bump-off pin.

4. Torque Screw
- Rotation moves the lockrod:
  a. Clockwise rotation advances lockrod, securing cutting unit (not shown).
  b. Counterclockwise rotation retracts lockrod, releasing cutting unit (not shown).

5. Lockrod
- Dual function:
  a. Acts as a wedge when advanced between locking balls, causing them to move outward in the ball canister and pushing the locking balls into the ball tracks of the cutting unit (not shown).
  b. Acts as a wedge when retracted using a raised, tapered key to force the bump-off pin against the cutting unit (not shown).

6. Locking Balls (2)
- Precision, chrome alloy-steel hardened balls used to transmit pull-back force to the cutting unit.

7. Bump-Off Pin
- Dual function:
  a. Releases cutting unit from the clamping mechanism.
  b. Prevents lockrod from rotating.

8. Bump-Off Pin Retention Screws (2)
- Secures bump-off pin in ball canister.

KM™ Manual Clamping System • Four-Pin Design

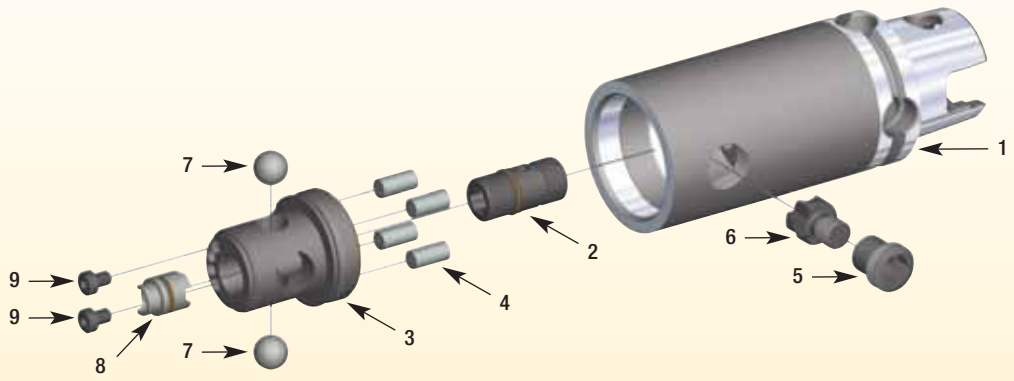

KM Manual Clamping Components • Functional Definitions

1. Clamping Unit Body
- Primary component of the clamping unit assembly, less additional hardware.

2. Canister Screw
- Secures screw canister to clamping unit body.

3. Screw Canister
- Main component of KM clamping mechanism holds and locates the locking balls and bump-off pin.

4. Canister Pins (4)
- Prevents canister from rotating.

5. Torque Screw
- Rotation moves the lockrod:
  a. Clockwise rotation advances lockrod, securing cutting unit (not shown).
  b. Counterclockwise rotation retracts lockrod, releasing cutting unit (not shown).

6. Lockrod
- Dual function:
  a. Acts as a wedge when advanced between locking balls, causing them to move outward in the ball canister and pushing the locking balls into the ball tracks of the cutting unit (not shown).
  b. Acts as a wedge when retracted using a raised, tapered key to force the bump-off pin against the cutting unit (not shown).

7. Locking Balls (2)
- Precision, chrome alloy-steel hardened balls used to transmit pull-back force to the cutting unit.

8. Bump-Off Pin
- Dual function:
  a. Releases cutting unit from the clamping mechanism.
  b. Prevents lockrod from rotating.

9. Bump-Off Pin Retention Screws (2)
- Secures bump-off pin in ball canister.

KM Manual Clamping Operating Instructions (KM32–KM80)

Locking

Before inserting the KM cutting unit into the clamping mechanism (Figure 1), clean the contact face and taper.

KM Manual clamping units require a torque wrench for proper operation. Turning the torque screw clockwise locks the cutting unit in position. For maximum safety, tighten the torque screw to the specified torque. Using a torque wrench ensures that the proper clamping forces are exerted.

Figure 1

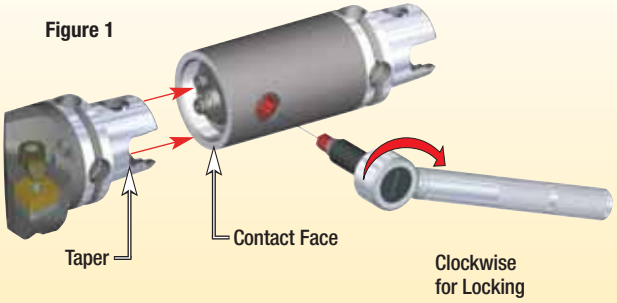

KM Manual Clamping System • Operating Torque

KM size	torque (ft. lbs.)	torque (Nm)	actuation drive size
KM32	7–9	10–12	5mm
KM40	9–12	12–16	6mm
KM50	20–25	27–34	10mm
KM63	35–40	47–54	12mm
KM80	58–63	79–85	14mm

CAUTION
Over tightening can cause damage to the clamping mechanism.

Operating Position

With the balls locked in position, and the face and self-locking taper fully engaged, the cutting unit and clamping unit are rigidly secured together (Figure 2).

Figure 2

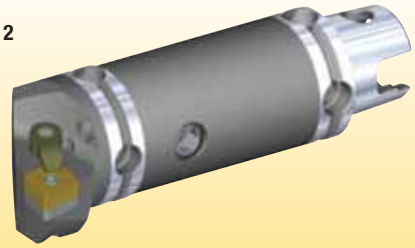

Unlocking

Rotate the torque screw counterclockwise until initial resistance is felt. In this position, the locking balls are free of the cutting unit, but the taper interference is still holding the KM unit in the clamping unit. At this point, the bump-off pin is in position to free the cutting unit from the interference fit.

Continue to rotate the torque screw slowly until the cutting unit is no longer making face contact (Figure 3) and is released from the taper. The torque screw will stop rotating and more resistance will be felt. Do not turn the torque screw any further.

Figure 3

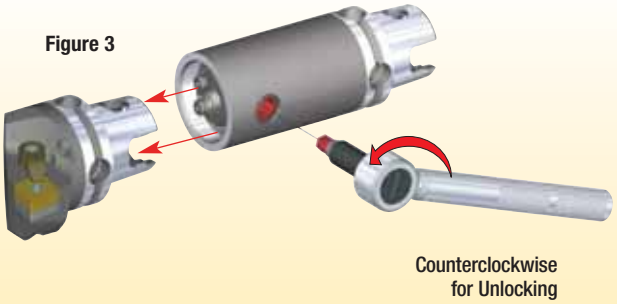

CAUTION
Continuing to rotate the torque screw may damage the clamping components.

KM Manual Repair Package Components (KM32–KM80)

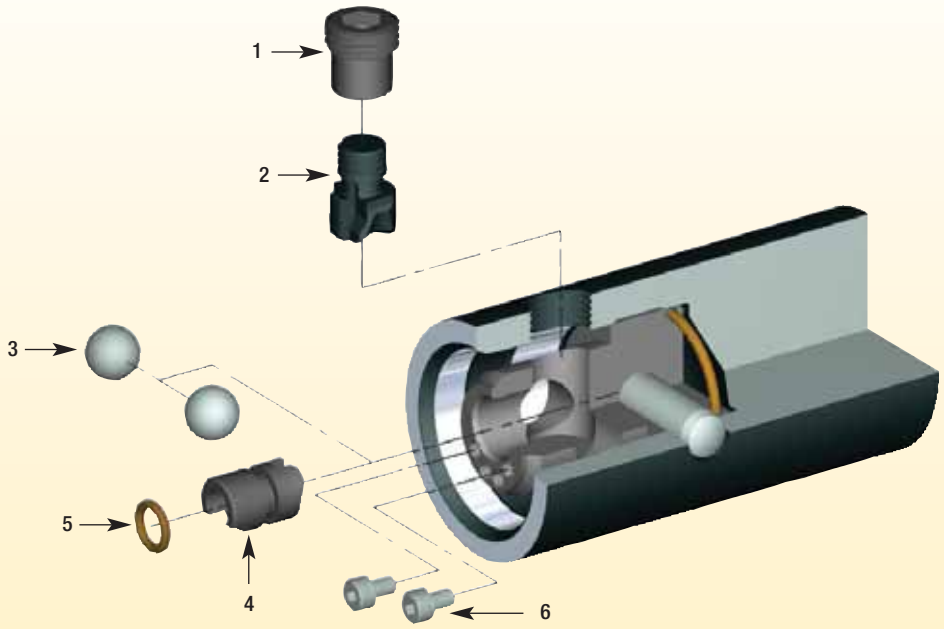

KM Manual Repair Package Components • Functional Definitions

1. Torque Screw
2. Lockrod
3. Locking Balls (2x)
4. Bump-Off Pin
5. O-Ring
6. Bump-Off Pin Retention Screws (2x)

Operator Maintenance:
All KM Clamping Units showing damage must be replaced or rebuilt. Burrs and nicks should be removed by stoning and/or polishing.

- Use KM Plugs to protect clamping units when not in use.
- Use KM spindle wipers to clean clamping units.

KM Manual Repair Packages

catalog number	3S order number	3L order number
KM32-PKG 3S or 3L	1023697	1023698
KM40-PKG 3S or 3L	1023699	1023700
KM50-PKG 3S or 3L	1023726	1023725
KM63-PKG 3S or 3L	1013701	1013702
KM80-PKG 3S or 3L.	1144980	1023701

KM™ Manual Clamping Unit • Disassembly Procedures

1. Remove the two socket-head cap screws that retain the bump-off pin (see Frame 1).
2. Grip the exposed end of the bump-off pin with pliers and pull straight out. Some resistance may be felt due to the O-ring seal around the bump-off pin (see Frame 2).
3. Using the appropriate metric hex wrench, remove the torque screw. The lockrod should come out with the torque screw. Separate the torque screw from the lockrod, remembering the lockrod has left-hand threads (see Frame 3 on next page).
4. Remove the locking balls from within the canister. Grease can cause them to stick inside. Pushing the balls one at a time towards the center of the canister then turning the clamping unit upside down and tapping it against your palm will usually dislodge them. If you must hit the clamping unit harder, be certain you do not damage the gage or locking face of the unit. A small magnetic screwdriver also works well (see Frame 4 on next page).
5. Normally, no further disassembly should be attempted. If the clamping unit body or canister has been damaged, it should be replaced with a new unit. You can also contact your Kennametal Sales office for instructions on how to send the unit to a Kennametal Repair facility.

Tools Required

- Hex wrenches.
- Pliers.
- Kennametal recommends and uses GLEITMO™ 805.
- Clean towels or shop rags.
- Solvent or degreaser that does not leave residue (used to clean inside the taper and canister). Should the unit become contaminated, you can use a degreasing agent or something similar to clean the surfaces.

KM size	hex size
KM32	2mm
KM40	2,5mm
KM50	3mm
KM63	5mm
KM80	5mm

CAUTION
DO NOT USE silicone cleaner or WD-40™-type lubricants.

lubricant	order number	size
GLEITMO 805 grease	**1567575**	500g cartridge
GLEITMO 805 grease	**1567577**	1000g tin

Frame 1

Frame 2

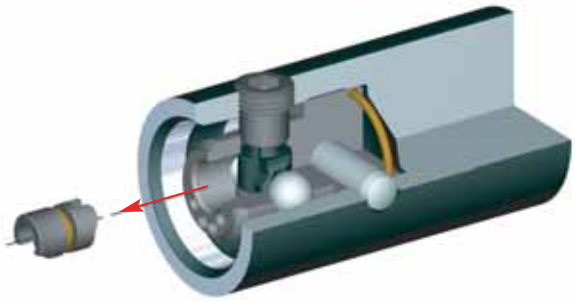

(continued)

KM™ Manual Clamping Unit • Disassembly Procedures *(continued)*

6. Clean locking balls, torque screw, lockrod, and bump-off pin of all grease and inspect for wear, burrs, or obvious damage. If rebuilding the unit with a repair parts package, we recommend using all new components contained in the kit. If you are not using the repair package, but are retiming or adjusting the unit, inspect the external threads on the torque screw and lockrod, the locking ball contact surfaces on the lockrod, and the mating surfaces between the lockrod and bump-off pin. Discard any components of questionable condition and replace with new ones. Note the condition of the raised taper key on the lockrod as you will need this later.

7. Inspect inside the KM taper for damage and/or contamination. Clean the taper and canister with solvent. Allow the unit to dry before reassembling. Inspect the torque screw threads in the body for damage.

8. If the unit is equipped for through-coolant capability, you may want to verify that the coolant passages are clear. Clean if required.

KM size	torque screw hex size
KM32	5mm
KM40	6mm
KM50	10mm
KM63	12mm
KM80	14mm

Frame 3

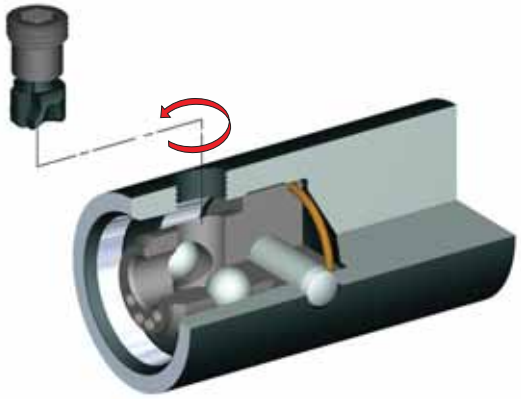

Frame 4

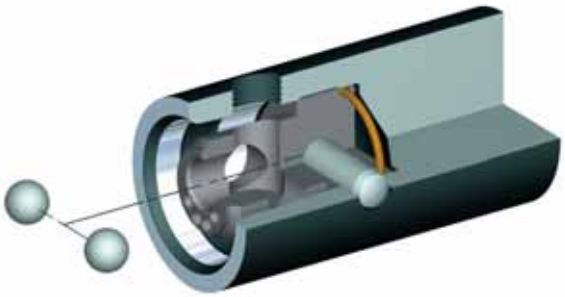

KM™ Manual Clamping Unit • Assembly/Timing Procedures

1. Place a small amount of GLEITMO™ 805 grease into the canister where the locking balls make contact, paying particular attention to the inner top surface of the locking ball bores.
2. Lightly coat both locking balls with grease. Insert the balls, one at a time, into the canister's central bore until it bottoms, then move the ball outward into the locking ball bores, not the torque screw hole (see Frame 5).
3. Lightly coat the threads of the lockrod and torque screw with grease and thread them together finger tight (left-hand threads). The torque screw and lockrod must remain tightly together during the reassembly procedure and rotated as one piece throughout (see Frame 6).
4. Make sure the balls are pushed radially into the bores. Using the metric Allen or T-handle wrench, thread the torque screw lockrod assembly into the body until it makes soft contact with the balls. Be certain the torque screw and lockrod rotate together by looking down into the canister as you thread them. If the lockrod and torque screw become unthreaded, you should remove them, re-tighten, and start Step 4 again.
5. Look into the canister through the bump-off pin bore and note the raised key on the lockrod. Position the key facing outward through the bump-off pin bore, centering it in the bore by backing out the torque screw only enough to properly align the key.
6. Place a KM cutting unit into the clamping unit. If cutting unit does not drop into place, go to Step 7. If the cutting unit drops into place, remove it, push the balls radially back out into the ball bores, and turn the torque screw/lockrod assembly inward a full turn (360°). Repeat Step 6 as many times as necessary until the unit does not drop into the taper.

Tools Required

- Hex wrenches.
- Pliers.
- Kennametal recommends and uses GLEITMO™ 805.
- Clean towels or shop rags.

CAUTION
DO NOT USE silicone cleaner or WD-40™-type lubricants.

lubricant	order number	size
GLEITMO 805 grease	**1567575**	500g cartridge
GLEITMO 805 grease	**1567577**	1000g tin

KM size	torque screw hex size
KM32	5mm
KM40	6mm
KM50	10mm
KM63	12mm
KM80	14mm

Frame 5

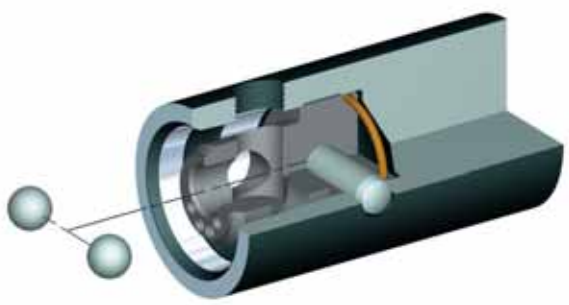

Frame 6

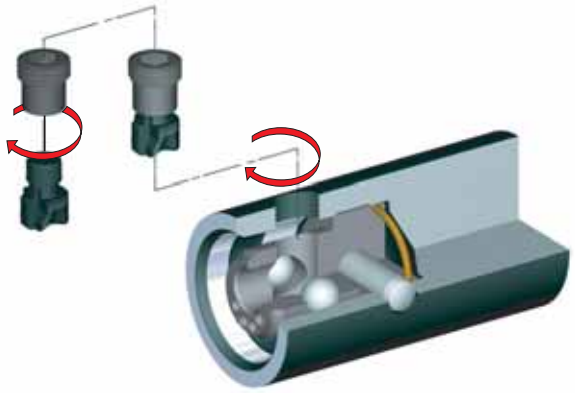

(continued)

KM™ Manual Clamping Unit • Assembly/Timing Procedures *(continued)*

7. Thread the torque screw/lockrod assembly outward one full turn (360°), making sure the raised key faces outward. Place a KM cutting unit into the clamping unit. It should drop into the taper easily. If it does not, repeat Step 7.

8. Insert the bump-off pin without its O-ring into the bore, being certain the angled surface of the bump-off pin will ride on the angled surface of the lockrod (see Frame 7).

9. When the bump-off pin is properly seated, its largest diameter should be below the end of the canister — it should not rotate. The pin is rotationally restrained by the lockrod key, in the bump-off pin keyway.

10. If all is correct, remove the bump-off pin, install its O-ring, lightly coat with grease paying particular attention to the slot, and reinstall into the bore.

11. Reinstall the socket-head cap screws that retain the bump-off pin (see Frame 8). Check for proper operation of the unit by pushing down on the end of the bump-off pin with your finger while tightening and loosening the torque screw through its full travel. You should feel the bump-off pin move in and out as the direction of the torque screw changes.

12. As a final check, rotate the torque screw outward until it stops. Install a KM cutting unit and tighten the torque screw to the proper torque required for locking. Ensure that there is no air gap between the locking faces of the cutting unit and the clamping unit. Loosen the torque screw. Initially, resistance will be felt while loosening the screw, and again when bumping off the tool from the taper. Only use light force to loosen the screw after the tool has been bumped off. Do not force the torque screw loose after tool bump-off or damage may result. Remove the cutting unit and install protective plastic or steel plug.

KM size	hex size
KM32	2mm
KM40	2,5mm
KM50	3mm
KM63	5mm
KM80	5mm

Frame 7

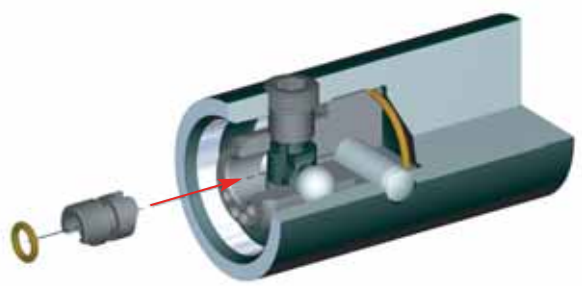

Frame 8

KM-LOC™ Clamping Units

Operating Instructions

All KM-LOC Clamping Units utilize disk springs to develop the correct clamping force. This clamping system does not require a torque wrench to achieve proper clamping force. The KM-LOC System provides consistent clamping forces designed to last 50,000 cycles.

KM-LOC Locking Sequence

Always ensure that the KM cutting unit and clamping unit are free of dirt and contaminants. When installing the cutting head into the clamping unit, note the key relations of the male and female tapers. The flange face will have about 1mm (.040") standoff from the gage face before lock up. If the amount of standoff is greater than this, the unit is either error proofed or the tapers are contaminated. Rotate the head 180° for correct, free-state standoff.

Next, insert a wrench with the properly sized metric bit into the cam socket. Rotating the cam socket clockwise 140° (where it will stop) locks the head into the clamping unit. The dimples on both the cam and clamping unit body are aligned when a positive stop is reached.

KM-LOC Unlocking Sequence

Remove chips or foreign material from around the cutting unit flange and clamping body. Insert the metric bit into the cam and rotate counterclockwise to unlock the unit. During this procedure, the lockrod will make contact with the inside of the cutting unit (this could feel like a positive stop), continue the counterclockwise turn until the head moves apart from the gage face.

When unlocked, a KM head will bump off. The KM System utilizes a 10:1 self-locking taper that requires a mechanical release.

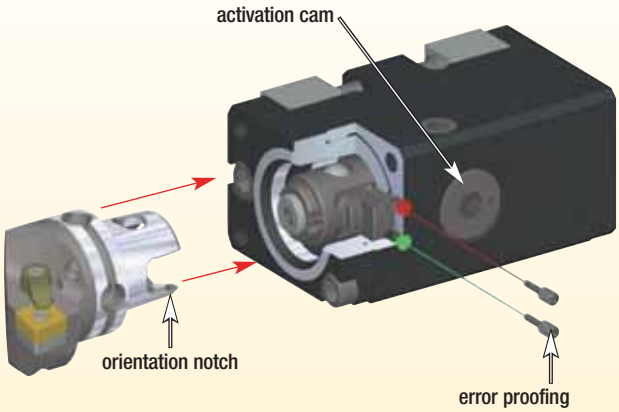

KM-LOC Activation Drive Size

KM system size	drive size
KM32	6mm
KM40	8mm
KM50	10mm
KM63	10mm

(continued)

KM-LOC™ Clamping Units *(continued)*

The KM-LOC

Under normal use, the KM-LOC unit is designed to last 50,000 cycles. The KM-LOC units are greased at the factory during assembly. To keep the unit functioning properly, it should be periodically greased and, if operating under normal conditions, done regularly every six months.

How to Grease the KM-LOC

Remove the M6 sealing screw from the front face of the lockrod and thread the grease fitting into the tapped hole. A grease fitting is in the spare parts package included with every KM-LOC clamping unit.

Approximate grease amounts are as follows:

KM32™.....0.2–0.3 fl. oz

KM40™.....0.3–0.4 fl. oz.

KM50™.....0.5–0.6 fl .oz.

KM63™.....0.5–0.6 fl. oz.

Kennametal uses and recommends GLEITMO™ 805, a white, high-performance grease paste.

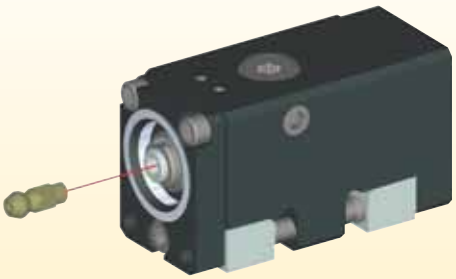

lubricant	order number	size
GLEITMO 805 grease	**1567575**	500g cartridge
GLEITMO 805 grease	**1567577**	1000g tin

KM-LOC™ Mounting Wedges • Tightening Torque

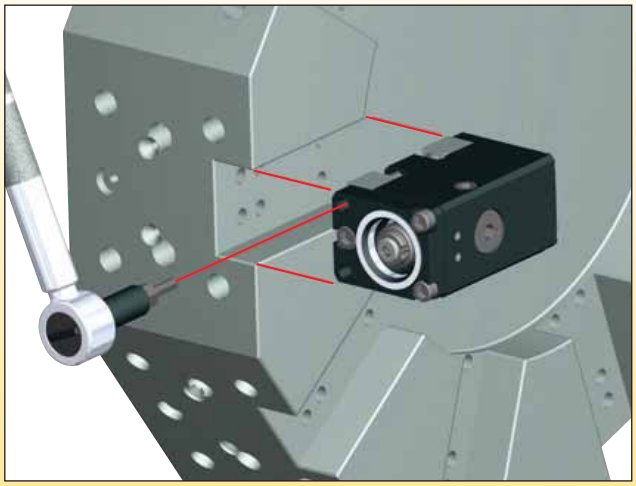

NOTE: Use a hex bit socket.

catalog number	wedge screw hex size	ft. lbs.	Nm
KM32CLSR/L2050K	4mm	10–14	14–18
KM32CLSR/L1250B	4mm	10–14	14–18
KM32CLSR/L1250C	4mm	10–14	14–18
KM32CLSR/L1650C	4mm	10–14	14–18

KM-LOC II Clamping Units

Operating Instructions

The KM-LOC II clamping system employs a cam and a pre-loaded disk spring pack to provide positive, stop-to-stop locking/unlocking in only 145º of movement. This clamping system does not require a torque wrench to achieve proper clamping force. The KM-LOC II clamping system provides consistent clamping forces designed to last 50,000 cycles.

KM-LOC II Locking Sequence

Always ensure that the KM cutting unit and clamping unit are free of dirt and contaminants. When installing the cutting head into the clamping unit, note the key relations of the male and female tapers. The flange face will have about 1mm (.040") standoff from the gage face before lock up. If the amount of standoff is greater than this, the unit is either error proofed or the tapers are contaminated. Rotate the head 180° for correct, free-state standoff.

Next, insert a wrench with the properly sized metric bit into the cam socket. Rotating the cam socket clockwise 145° (where it will stop) locks the head into the clamping unit. The dimples on both the cam and clamping unit body are aligned when a positive stop is reached.

KM-LOC II Unlocking Sequence

Remove chips or foreign material from around the cutting unit flange and clamping body. Insert the metric bit into the cam and rotate counterclockwise to unlock the unit. During this procedure, the lockrod will make contact with the inside of the cutting unit (this could feel like a positive stop), continue the counterclockwise turn until the head moves apart from the gage face.

When unlocked, a KM head will bump off. The KM System utilizes a 10:1 self-locking taper that requires a mechanical release.

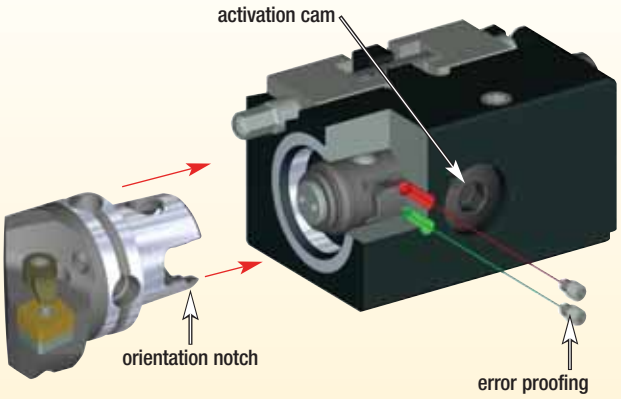

KM-LOC II Activation Drive Size

KM system size	drive size
KM32	6mm
KM40	8mm
KM50	10mm
KM63	10mm

(continued)

KM-LOC II Clamping Units *(continued)*

The KM-LOC II

Under normal use, the KM-LOC II unit is designed to last 50,000 cycles. The KM-LOC II units are greased at the factory during assembly. To keep the unit functioning properly, it should be periodically greased and, if operating under normal conditions, done regularly every six months.

How to Grease the KM-LOC II

Remove the standard M4 socket-set screw from the bottom of the cam hex, and thread the grease assembly into the tapped hole. An assembled grease fitting and adapter are in the spare parts package included with every clamping unit.

Approximate grease amounts are as follows:

KM32™.....0.2–0.3 fl. oz

KM40™.....0.3–0.4 fl. oz.

KM50™.....0.5–0.6 fl .oz.

KM63™.....0.5–0.6 fl. oz.

Kennametal uses and recommends GLEITMO™ 805, a white, high-performance grease paste.

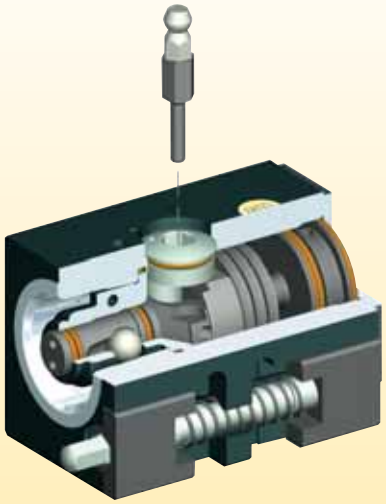

lubricant	order number	size
GLEITMO 805 grease	**1567575**	500g cartridge
GLEITMO 805 grease	**1567577**	1000g tin

KM-LOC II Mounting Wedges • Tightening Torque

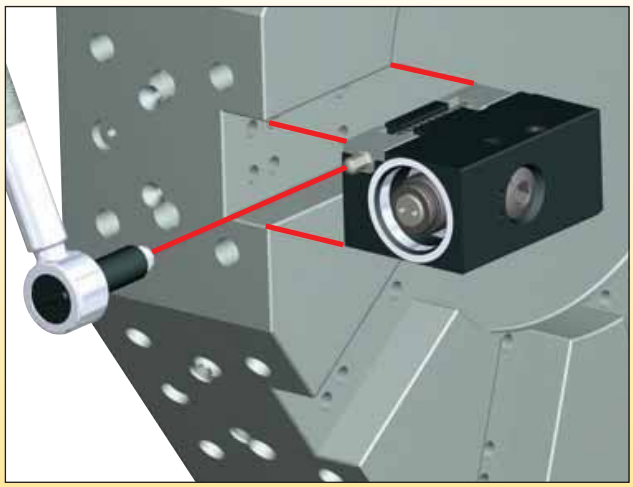

catalog number	wedge screw hex size	ft. lbs.	Nm
KM40 CL2SR/L 1260B	6	30–34	41–46
KM40 CL2SR/L 1660C	7	43–47	58–64
KM40 CL2SR/L 1660D	7	43–47	58–64
KM40 CL2SR/L 2060D	7	43–47	58–64
KM40 CL2SR/L 2560M	7	43–47	58–64
KM40 CL2SR/L 3260P	7	43–47	58–64
KM50 CL2SR/L 1675D	7	43–47	58–64
KM50 CL2SR/L 2075D	8	58–62	79–84
KM50 CL2SR/L 2575M	7	43–47	58–64
KM50 CL2SR/L 2575P	7	43–47	58–64
KM63 CL2SR/L 2090E	8	58–62	79–84
KM63 CL2SR/L 3290P	8	58–62	79–84

NOTE: Use a six-point socket.

KM Rapid Clamping Units

Operating Instructions

The KM Rapid clamping system is a compact quick-change tooling system that does not require a torque wrench to achieve proper clamping force. The KM Rapid clamping unit spring pack supplies the correct clamping force while the cam permits quick and easy locking/unlocking of the KM cutting unit.

KM Rapid Locking Sequence

At the “unlock” position, which is marked on the housing, the cutting unit can be removed or fitted in the clamping unit. By moving the cam clockwise, the locking balls are pushed outwards and the face stand-off gets closed. Moving the cam further pushes the locking balls further outward and generates clamping force at the locating face. The handling force moves past the maximum position, then slightly back, to reach the “lock” position.

KM Rapid Unlocking Sequence

To unlock the cutting unit, turn the cam counterclockwise. In this position, the locking balls are free of the cutting unit, but the taper interference is still holding the KM cutting unit in the clamping unit. By turning the cam further to overcome the interference, the cutting unit will be released and can be removed. In any case, do not try to push too hard against the unlocking point because it will result in damage to the locating pin and the cam.

The entire locking and unlocking sequence takes a few seconds.

KM Rapid Plus Clamping Units

Operating Instructions

The KM Rapid Plus clamping system is a compact cartridge quick-change tooling system that does not require a torque wrench to achieve proper clamping force. The KM Rapid Plus clamping unit spring pack supplies the correct clamping force while the cam permits quick and easy locking/unlocking of the KM cutting unit.

KM Rapid Plus Locking Sequence

At the “unlock” position, the cutting head can be removed or fitted in the clamping unit. By moving the eccentric shaft clockwise, the axial lockrod is moving, the clamping balls are pushed outward, and the face stand-off is closed. Moving the eccentric shaft further pushes the locking ball over the axial lockrod further outward and generates clamping force at the locating face. The handling force moves past the maximum position, then slightly back, to reach the “lock” position. Do not move the cam further at this position.

KM Rapid Plus Unlocking Sequence

To unlock the cutting unit, turn the eccentric shaft counterclockwise. In this position, the locking balls are free of the clamping unit, but the taper interfence is still holding the cutting unit in the clamping unit. By turning the eccentric shaft further to overcome the interference, the cutting head will be released and can be removed.

The entire locking and unlocking sequence takes a few seconds.

Automatic Clamping System

Operating Instructions

The KM automatic clamping system uses a disk spring package to supply force to the lock rod — driving the locking balls and providing clamping force to the cutting unit. The mechanical advantage of the clamping mechanism is designed specifically for a given spring force to supply proper clamping force. Once the cutting unit is clamped in the KM automatic clamping unit, it is securely held in place until released by applying force to the end of the spring end cap. In most cases, this is accomplished using a hydraulic cylinder. KM automatic clamping units contain sealed coolant ports as well as a system for distributing air through the unit.

Air serves two functions: (1) air is used to clean the taper and face area during tool change; (2) it is also used to detect improper tool change. Air is routed to the intersection of the taper and the face. If the faces of the cutting unit and the clamping unit do not totally seal after a tool change, air will continue to escape and can be used to detect a tool change fault. KM automatic clamping units are available in several configurations for application on a wide variety of machines.

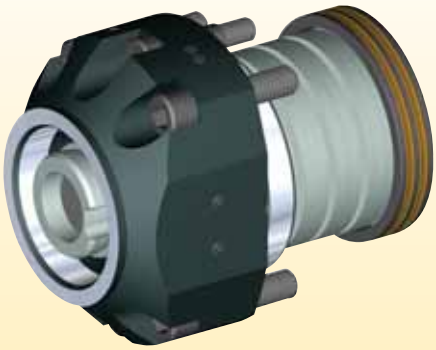

KM-TS™ • Kennametal Modular Tool Changing

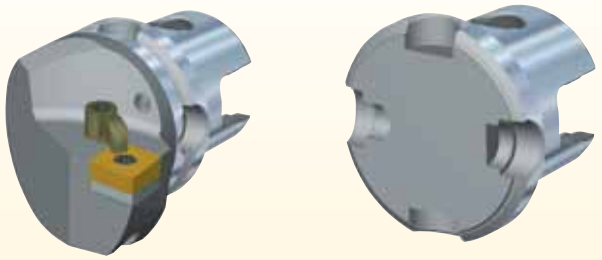

Automatic tool changer configuration

KM-TS is engineered to provide machine tool builders the capability to design a machine around a very rigid and proven system while maintaining full automation. It is the ultimate in flexible tooling systems and is equipped with four holes in the V-groove.

The next generation of multifunction mill-turn machines demand flexible and high-tech tooling systems. Previously, the V-groove in the KM system permitted automatic tool changing but without the capability for tool identification chips.

Tool Changing Location Features

- Two horizontally opposed holes in the V-groove for the tool changer and storage in the tool magazine. Within these two holes are counterbored holes that can be used for tool orientation.
- Two vertically oriented holes in the V-groove for tool identification chip and balancing.

Additional New Features

- A standard hardness of 50–54 HRC makes the tool durable enough to withstand the forces generated during high-speed tool changes and enables long-term use.
- Optimal toughness from the taper to the insert pocket seat ensures maximum protection against wear at all contact points and the highest stability under high cutting loads.
- The KM-TS tools have a silver, satin-finished surface that provides durability and long-lasting appearance.

O-ring		
KM size	**catalog number**	**order number**
KM32TS	**OR00614070V90**	1850414
KM40TS	**OR00739070V90**	1179959
KM50TS	**OR00987103V90**	1284041
KM63TS	**OR01234139V90**	1608616
KM80TS	**OR01734139V90**	1586813

Summary of Benefits

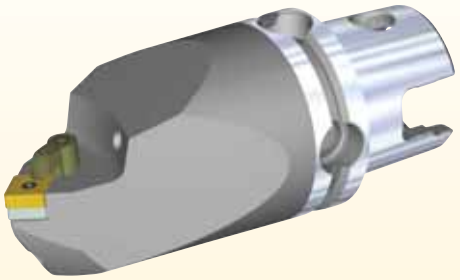

- A proven spindle interface for Daewoo®, Nakamura-Tome™, Takisawa™, and many other builders.
- Full compatibility with KM63™ and Kennametal UT63™ tools and adapters.
- Use with manual and fully automatic tool changing on lathes and modern mill/turn machines.
- Precision-ground tool taper and locating face.
- Optimal coolant supplied directly onto the cutting point, guaranteeing the highest-level of performance (see chart below).
- For dry machining, the coolant hole can be easily closed with a screw.

order number	description
1975161	M5 Coolant Nozzle

KM63XMZ™

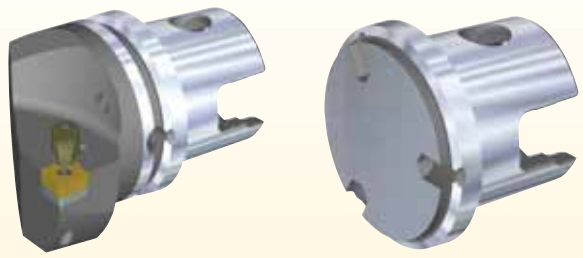

Automatic tool changer configuration

KM63XMZ has been engineered to work specifically on Mazak® INTEGREX® Mark IV Series of Integrex machines. The Mazak INTEGREX combines a high-powered turning center and a full-function machining center to produce parts in a single setup. KM63XMZ is an integral part of the success and ingenuity of these machines.

A standard hardness of 50–54 HRC enables long-term use and durability to withstand the forces generated during high-speed tool changes. KM63XMZ standard material provides optimal toughness from the taper to the insert pocket seat. This ensures maximum protection against wear at all contact points and the highest stability under high cutting loads. The tools have a silver, satin-finished surface that provides a durable and long-lasting appearance.

Conventional machine tools require multiple setups, extra manpower for part handling, in-process inventory, larger floor space, and increased tooling and workholding expenses.

- KM63XMZ will help reduce your overall manufacturing cost with multitask piece part processing.
- KM63XMZ will optimize your machining operations — however challenging your particular application!
- The world's most economical, rigid, and accurate modular quick-change tooling!
- Dramatically reduce your machine downtime and increase productivity!
- Large product selection for your machining needs!
- Special design tools available for unique applications!
- A proven tooling system for multitasking machines like the Mazak INTEGREX Machine Tool System!

O-ring		
KM size	catalog number	order number
KM63XMZ	**OR01237103V90**	1979353

KM63XMZ Tool Orientation Specification

Left-Hand Orientation

For turning clockwise toward the main spindle.
Catalog Number: KM63XMZMCLNLF12Y

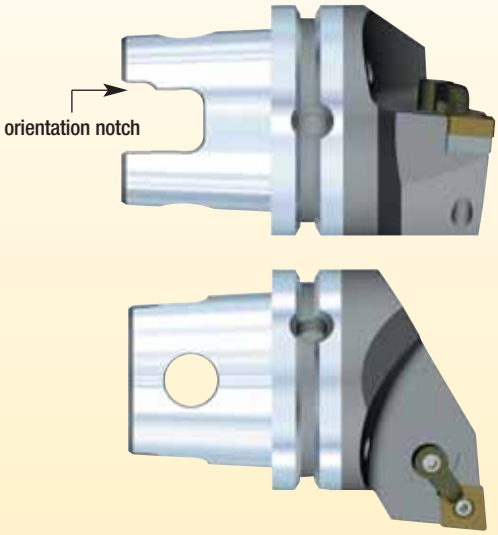

Right-Hand Orientation

For turning counterclockwise toward the main spindle.
Catalog Number: KM63XMZMCLNR12Y

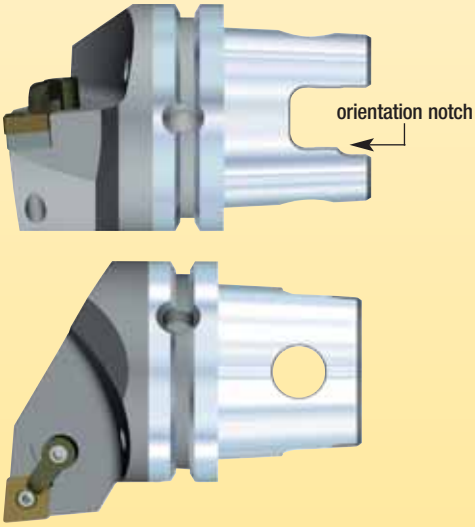

Operating Conditions

The KM tooling joint is an extremely rigid and stable system that is specifically designed to supply consistent results. As with any mechanical coupling, KM has limits that, if exceeded, could result in mechanical damage to the joint and/or its components. To help you stay within these limits, Kennametal has established maximum safe tangential loads for each system size. These loads are described as a certain amount of force at the standard "F" and "L1" dimensions for each given system size.

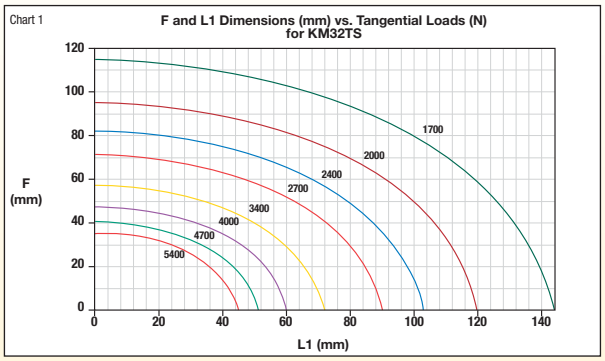

Example

IMPORTANT
Information shown on the following charts was developed exclusively for use with KM tooling in static conditions. Do not use for any other tooling system because the results will not apply. To account for cutting force fluctuations in dynamic conditions, a reduction of 20–30% should be applied to the loads shown in charts.

Example of Calculation:

Where: P = rated tangential load

K = empirical coefficient depending on KM system size and the units of measure

KM32™	K=190200
KM40™	K=383600
KM50™	K=887400
KM63™	K=1718000
KM80™	K=3085800

$$P = \frac{K}{\sqrt{(0.8\ L1)^2 + F^2}}$$

Given: The KM integral shank boring bar, ordering code KM40TS S32G-MCLNR12

Dimensions: L1 = 90mm (3.543")
F = 22mm (0.866")

Required: What is maximum permissible tangential load?

$$P = \frac{383600}{\sqrt{(0.8 \times 90)^2 + 22^2}} = 5095\ N$$

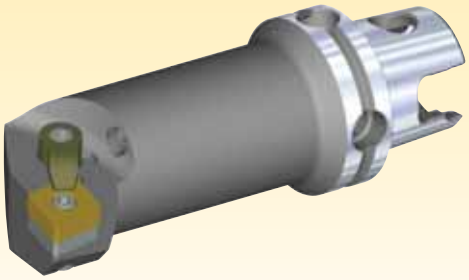

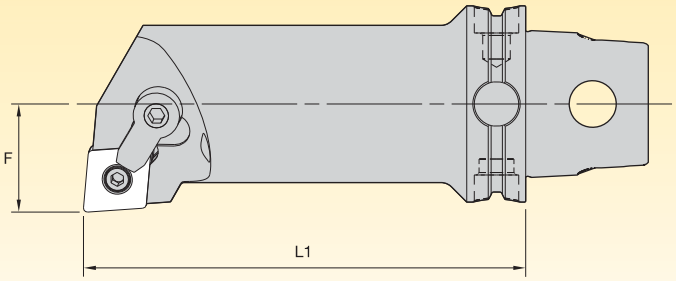

(continued)

Operating Conditions *(continued)*

IMPORTANT
Information shown on the following charts was developed exclusively for use with KM tooling in static conditions. Do not use for any other tooling system because the results will not apply. To account for cutting force fluctuations in dynamic conditions, a reduction of 20–30% should be applied to the loads shown in charts.

The following example illustrates how to use Charts 1, 3, 5, 7, and 9

Given: KM40™ integral shank boring bar, ordering code KM40TS-S32G-MCLNR12

Dimensions: KM40 integral shank boring bar, ordering code KM40TS-S32G-MCLNR12 — **L1** = 90mm, **F** = 22mm

Required: What is maximum permissible tangential load?

Solution: To determine the tangential load:

a) Determine the correct chart to use. (This is a KM40 tool, so use Chart 3).
b) Find the intersection point of the two lines that correspond to the dimensions L1 = 90mm, F = 22mm. These two lines intersect just above the 6670 N (1500 lbs) curve.
c) The permissible tangential load is the approximate load at the point of intersection. The point of intersection is at approximately 6890 N (1550 lbs).

As you can see from the calculation, the actual value is 6790 N (1528 lbs). Small variations are to be expected from reading the approximate location on the chart but should be inconsequential.

Safe cutting conditions are achieved when the actual tangential load that is being put on the KM tooling does not exceed the maximum permissible tangential force. To help you determine the approximate value of your actual tangential force, Charts 2, 4, 6, and 8 have been developed (pages K26–K35). They show the relationship between depth of cut and feed rate at various tangential forces.

They are recommended when using standard CNMG and TNMG insert geometries to machine plain carbon steels (AISI 1000 series), most alloy steels (AISI 4000 series), and some tool and stainless steels (H11, 316).

The following example illustrates how to use Charts 2, 4, 6, 8, and 10

Given: KM40 integral shank boring bar, ordering code KM40TS-S32G-MCLNR12
feed rate: 0.016 IPR
depth of cut: .200" (doc)

Required: What is approximate tangential force?

Solution: To determine the tangential force:

a) Determine the correct chart to use. (This is a KM40 tool, so use Chart 4).
b) Find the intersection point of the two lines that correspond to the 0.016 IPR feed rate and the .200" doc.
c) The approximate tangential force is the force at the point of intersection. The point of intersection is at approximately 4450 N (1000 lbs).

Please remember that these are approximate values and should be used only as a reference. If there is any doubt whether these charts are accurate enough, the actual cutting force should be calculated.

These charts were designed to determine conditions within the limits of the various KM tooling system sizes. However, in actual cutting conditions, there are many other limitations, such as insert strength or excessive overhangs, that may limit the cutting forces to values far lower than those represented in the charts.

Operating Conditions • KM32TS™ • Metric

IMPORTANT
Information shown on the following charts was developed exclusively for use with KM tooling in static conditions. Do not use for any other tooling system because the results will not apply. To account for cutting force fluctuations in dynamic conditions, a reduction of 20–30% should be applied to the loads shown in charts.

Chart 1

F and L1 Dimensions (mm) vs. Tangential Loads (N) for KM32TS

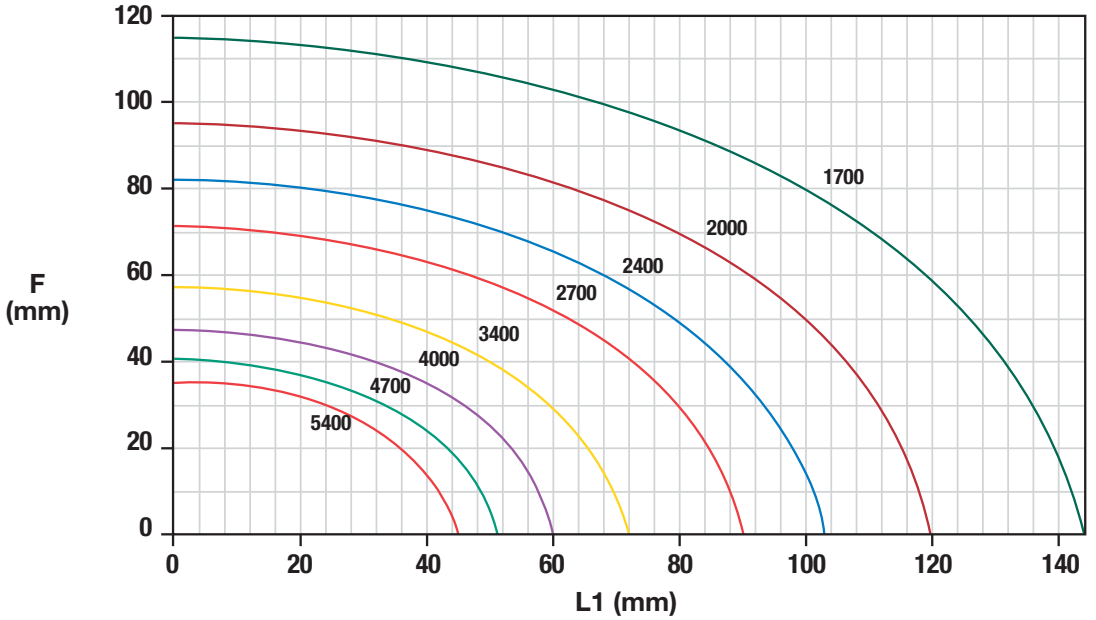

Chart 2

Depth of Cut (mm) and Feed Rate (mm/rev) vs. Tangential Forces (N) for KM32TS

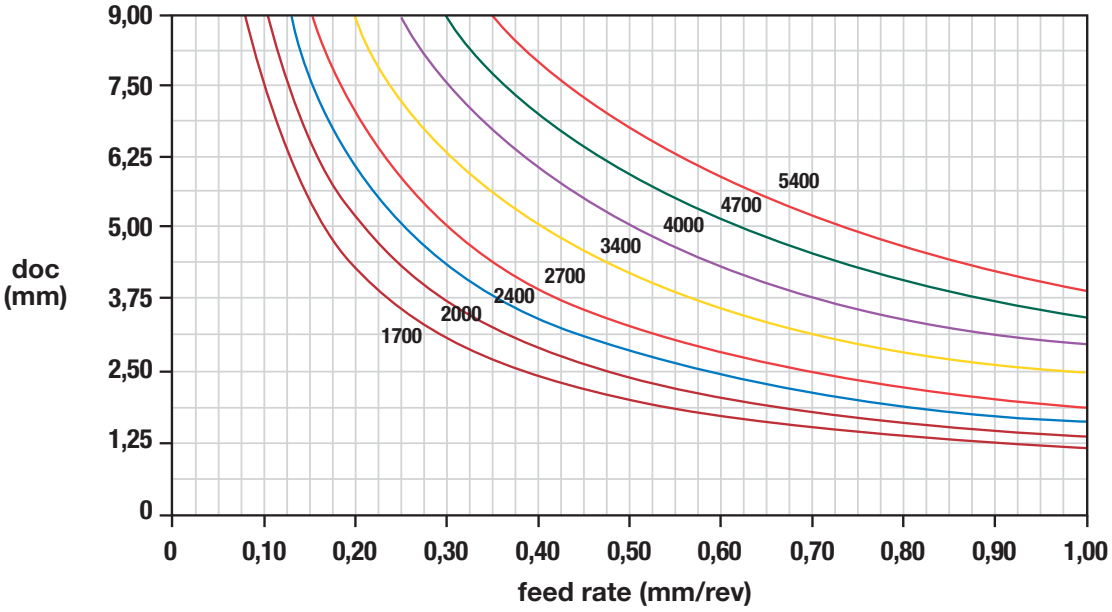

Operating Conditions • KM32TS™ • Inch

IMPORTANT
Information shown on the following charts was developed exclusively for use with KM tooling in static conditions. Do not use for any other tooling system because the results will not apply. To account for cutting force fluctuations in dynamic conditions, a reduction of 20–30% should be applied to the loads shown in charts.

Chart 1

F and L1 Dimensions (inch) vs. Tangential Loads (lbs) for KM32TS

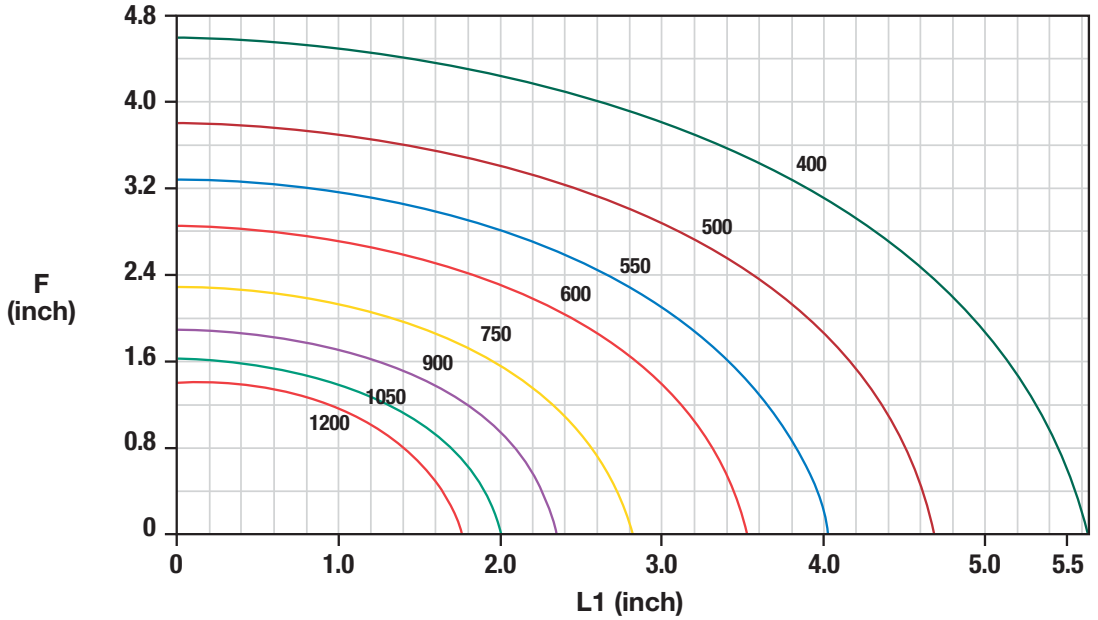

Chart 2

Depth of Cut (inch) and Feed Rate (IPR) vs. Tangential Forces (lbs) for KM32TS

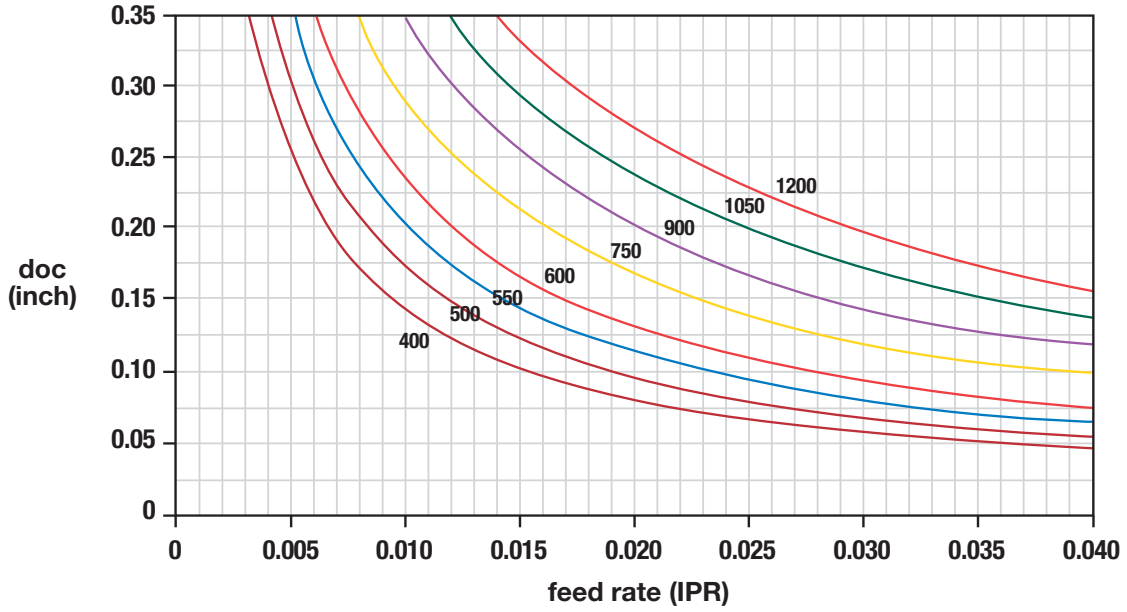

Operating Conditions • KM40TS™ • Metric

IMPORTANT
Information shown on the following charts was developed exclusively for use with KM tooling in static conditions. Do not use for any other tooling system because the results will not apply. To account for cutting force fluctuations in dynamic conditions, a reduction of 20–30% should be applied to the loads shown in charts.

Chart 3

F and L1 Dimensions (mm) vs. Tangential Loads (N) for KM40TS

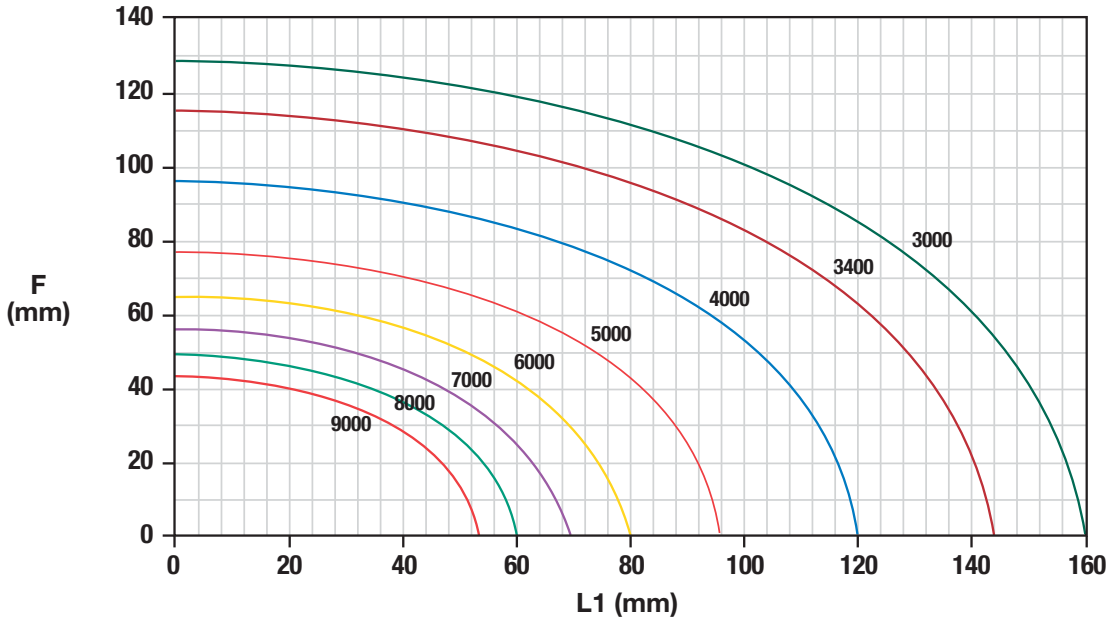

Chart 4

Depth of Cut (mm) and Feed Rate (mm/rev) vs. Tangential Forces (N) for KM40TS

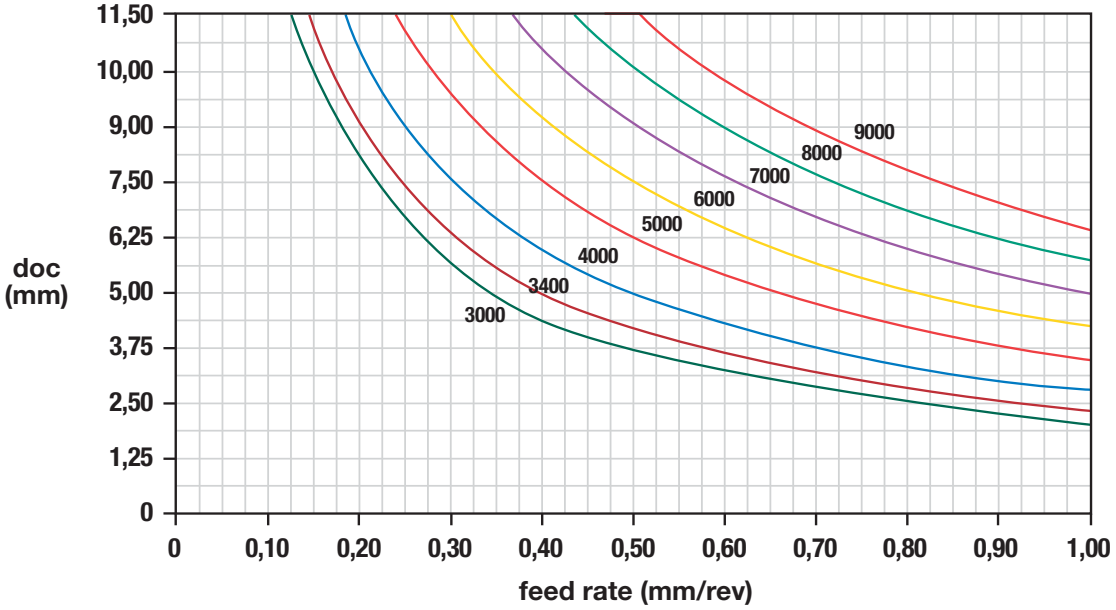

Operating Conditions • KM40TS™ • Inch

IMPORTANT
Information shown on the following charts was developed exclusively for use with KM tooling in static conditions. Do not use for any other tooling system because the results will not apply. To account for cutting force fluctuations in dynamic conditions, a reduction of 20–30% should be applied to the loads shown in charts.

Chart 3

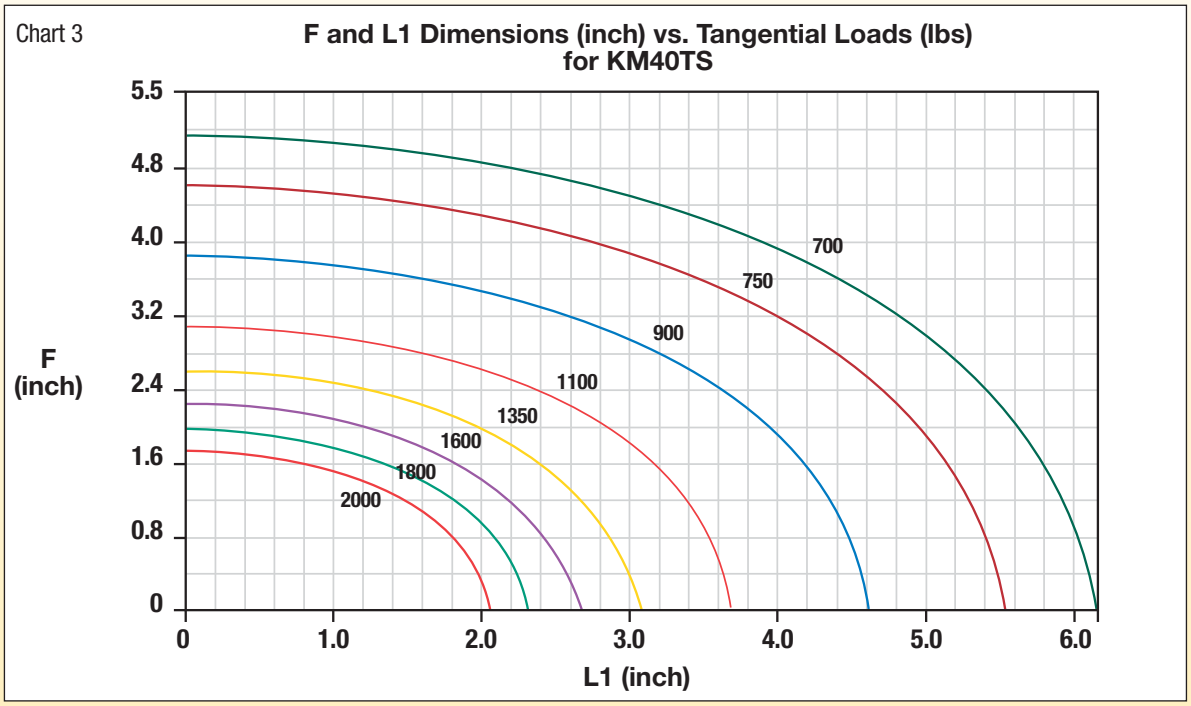

Chart 4

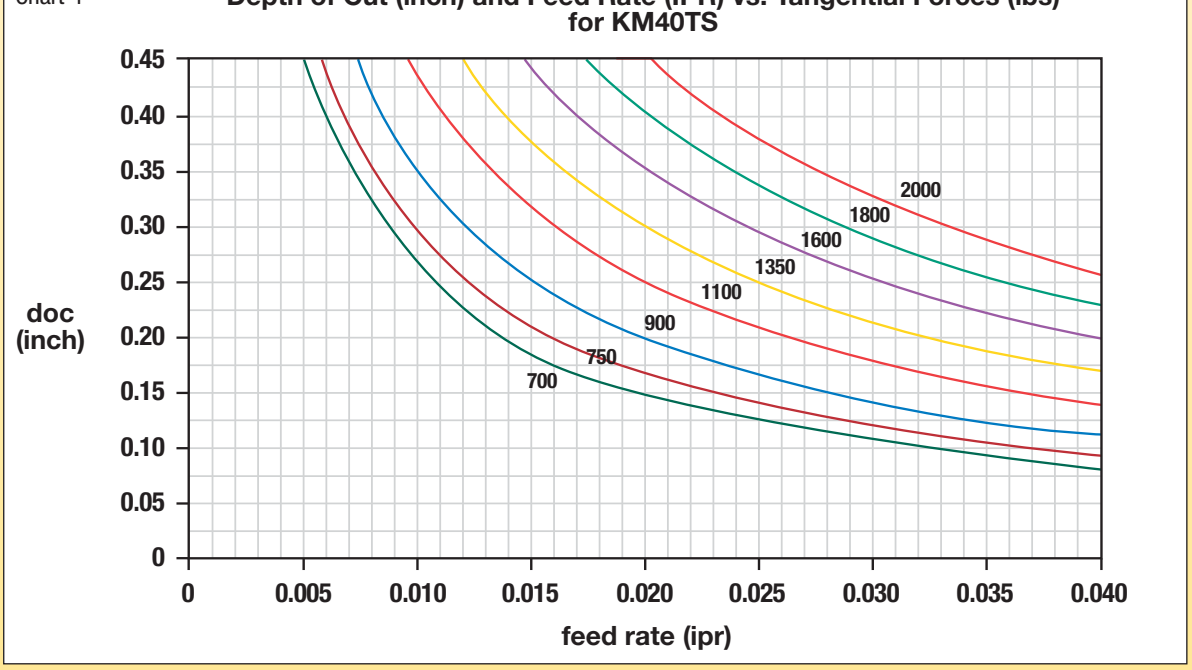

Operating Conditions • KM50TS™ • Metric

IMPORTANT
Information shown on the following charts was developed exclusively for use with KM tooling in static conditions. Do not use for any other tooling system because the results will not apply. To account for cutting force fluctuations in dynamic conditions, a reduction of 20–30% should be applied to the loads shown in charts.

Chart 5

F and L1 Dimensions (mm) vs. Tangential Loads (N) for KM50TS

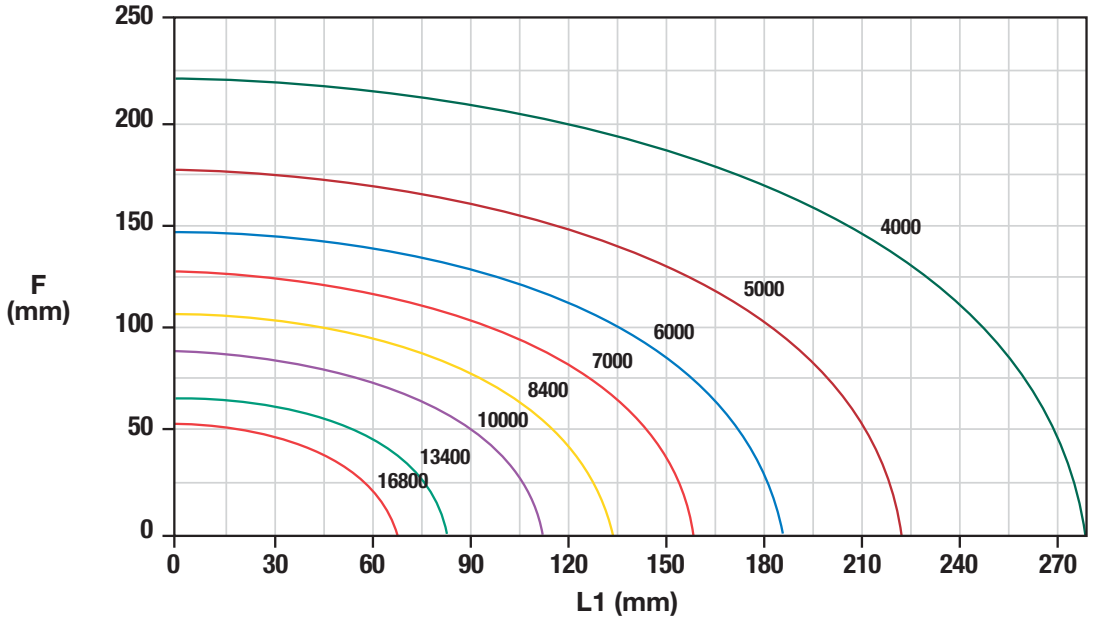

Chart 6

Depth of Cut (mm) and Feed Rate (mm/rev) vs. Tangential Forces (N) for KM50TS

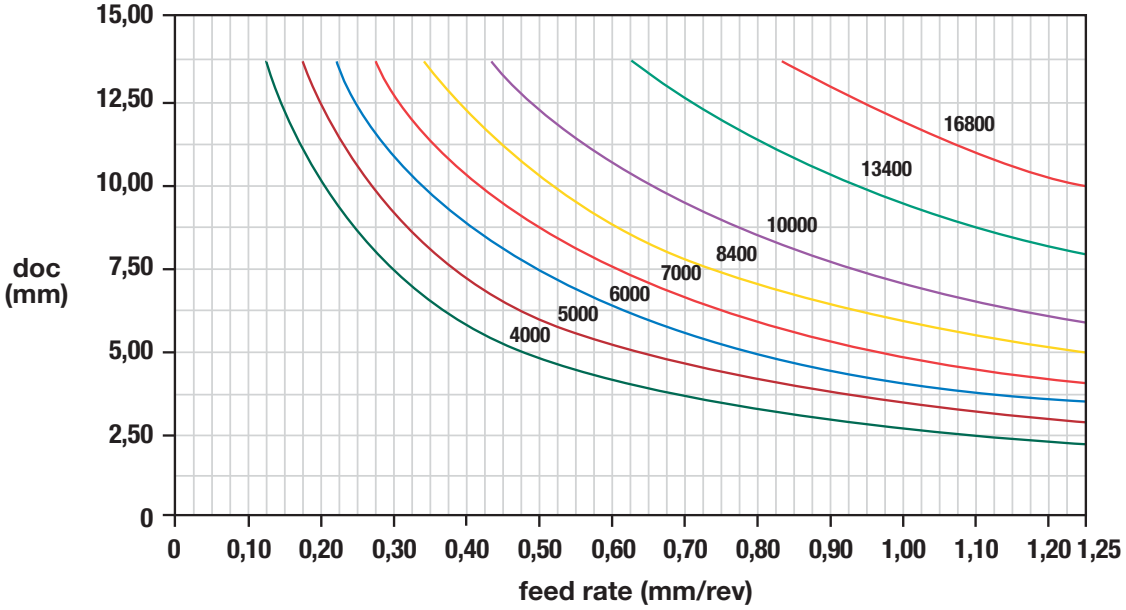

Operating Conditions • KM50TS™ • Inch

IMPORTANT
Information shown on the following charts was developed exclusively for use with KM tooling in static conditions. Do not use for any other tooling system because the results will not apply. To account for cutting force fluctuations in dynamic conditions, a reduction of 20–30% should be applied to the loads shown in charts.

Chart 5

F and L1 Dimensions (inch) vs. Tangential Loads (lbs) for KM50TS

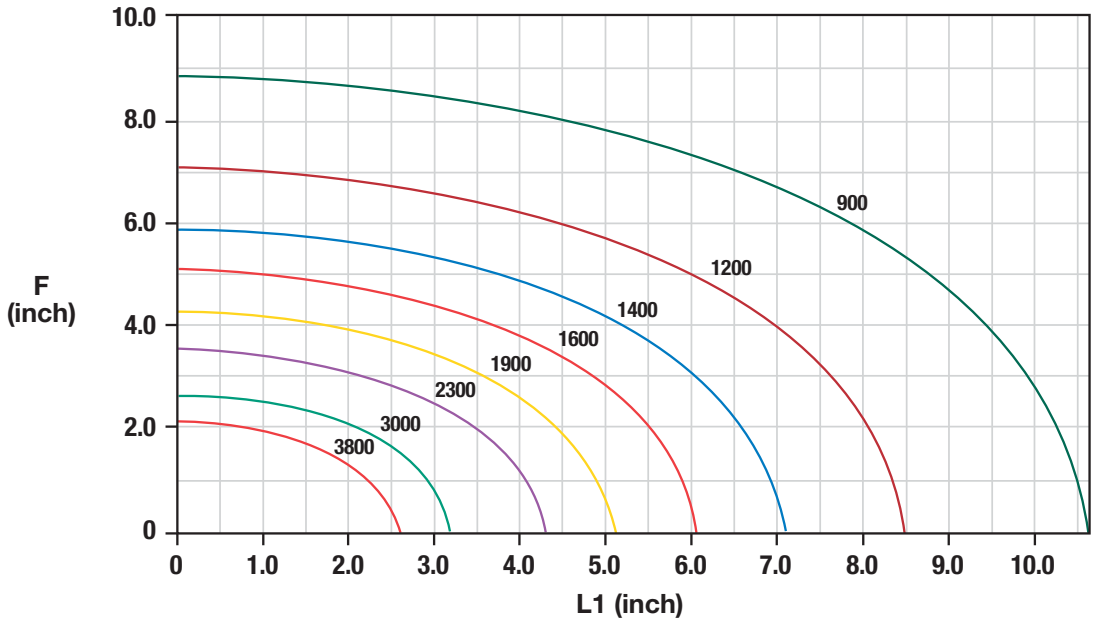

Chart 6

Depth of Cut (inch) and Feed Rate (IPR) vs. Tangential Forces (lbs) for KM50TS

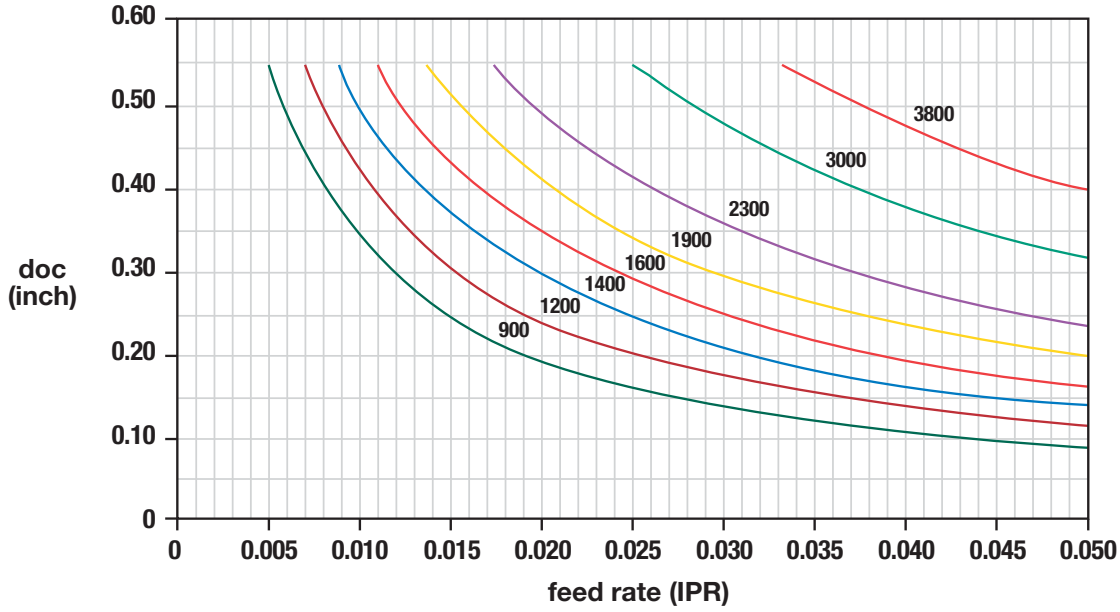

Operating Conditions • KM63TS™ and KM63XMZ™ • Metric

IMPORTANT
Information shown on the following charts was developed exclusively for use with KM tooling in static conditions. Do not use for any other tooling system because the results will not apply. To account for cutting force fluctuations in dynamic conditions, a reduction of 20–30% should be applied to the loads shown in charts.

Chart 7

F and L1 Dimensions (mm) vs. Tangential Loads (N) for KM63TS and KM63XMZ

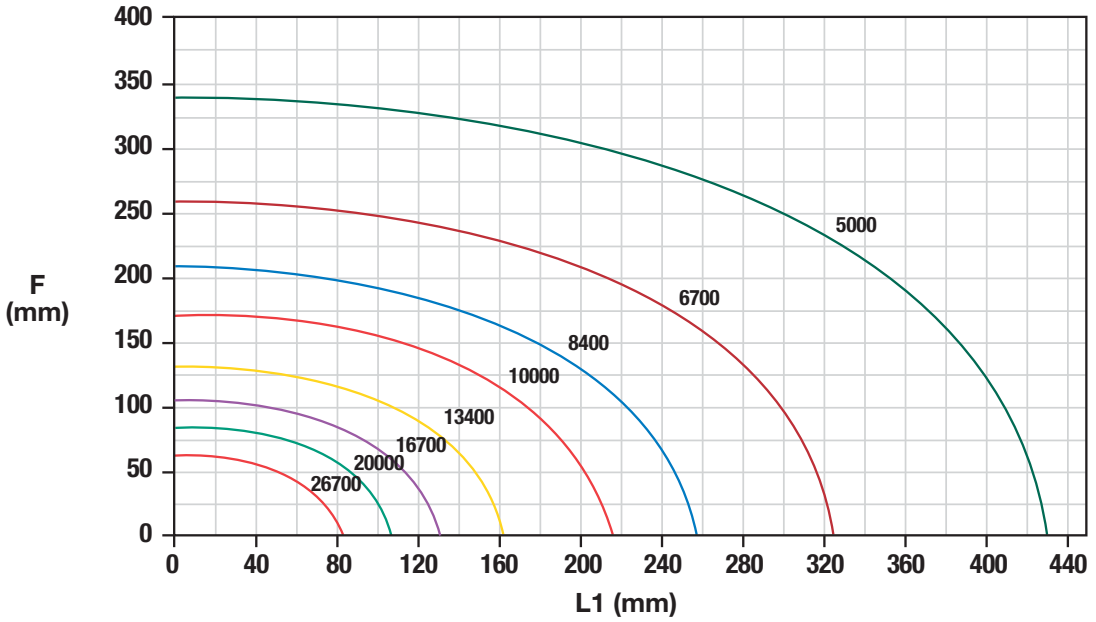

Chart 8

Depth of Cut (mm) and Feed Rate (mm/rev) vs. Tangential Forces (N) for KM63TS and KM63XMZ

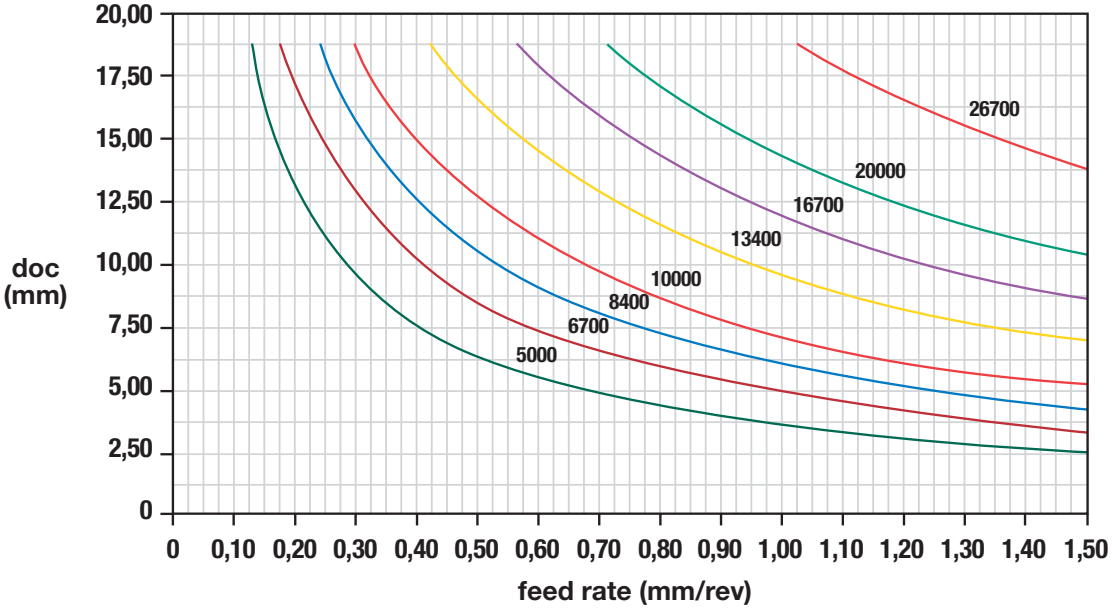

Operating Conditions • KM63TS™ and KM63XMZ™ • Inch

IMPORTANT
Information shown on the following charts was developed exclusively for use with KM tooling in static conditions. Do not use for any other tooling system because the results will not apply. To account for cutting force fluctuations in dynamic conditions, a reduction of 20–30% should be applied to the loads shown in charts.

Chart 7

F and L1 Dimensions (inch) vs. Tangential Loads (lbs) for KM63TS and KM63XMZ

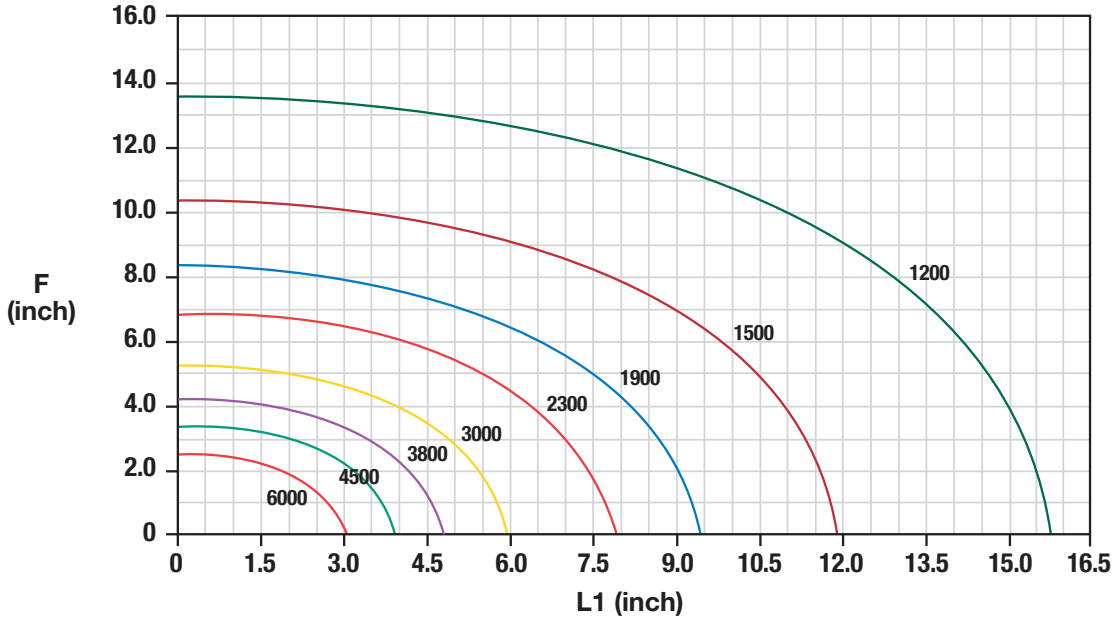

Chart 8

Depth of Cut (inch) and Feed Rate (IPR) vs. Tangential Forces (lbs) for KM63TS and KM63XMZ

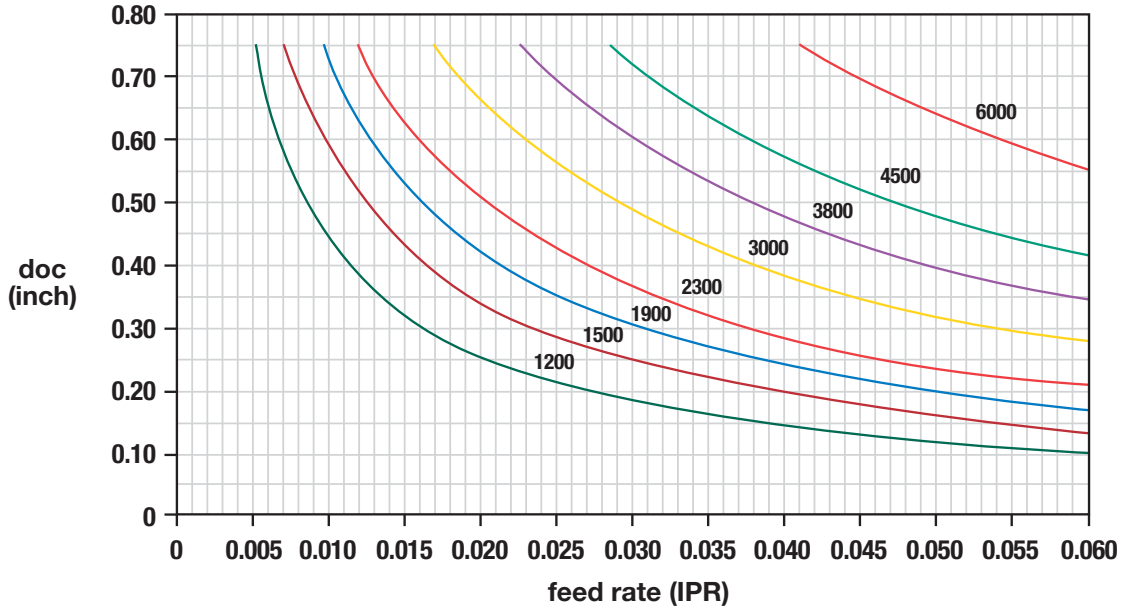

Operating Conditions • KM80TS™ and KM80ATC™ • Metric

IMPORTANT
Information shown on the following charts was developed exclusively for use with KM tooling in static conditions. Do not use for any other tooling system because the results will not apply. To account for cutting force fluctuations in dynamic conditions, a reduction of 20–30% should be applied to the loads shown in charts.

Chart 9

F and L1 Dimensions (mm) vs. Tangential Loads (N) for KM80TS and KM80ATC

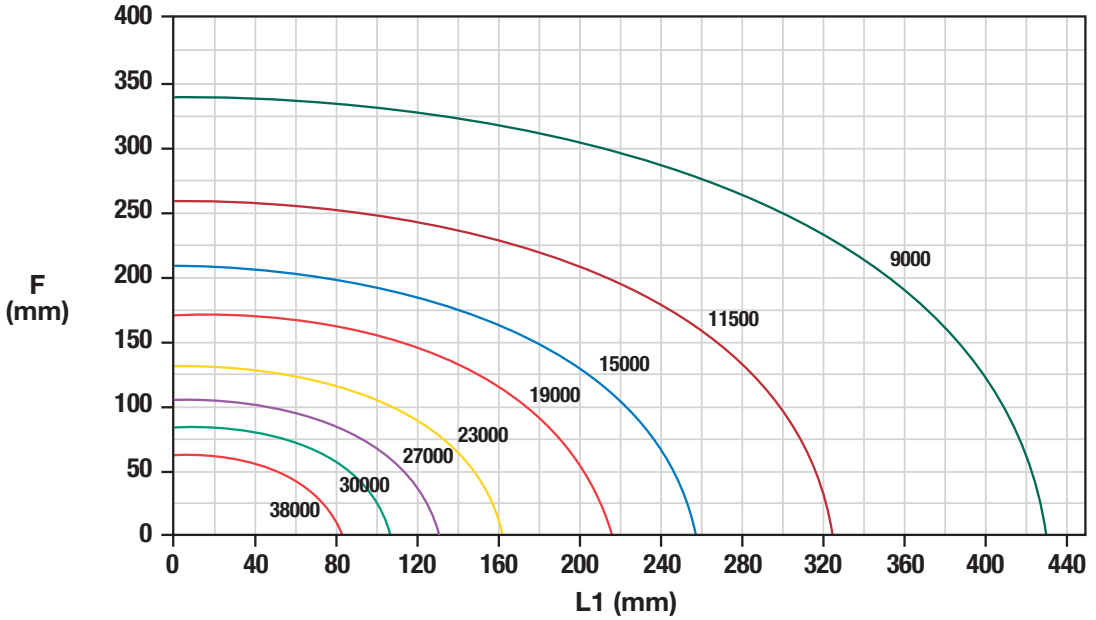

Chart 10

Depth of Cut (mm) and Feed Rate (mm/rev) vs. Tangential Forces (N) for KM80TS and KM80ATC

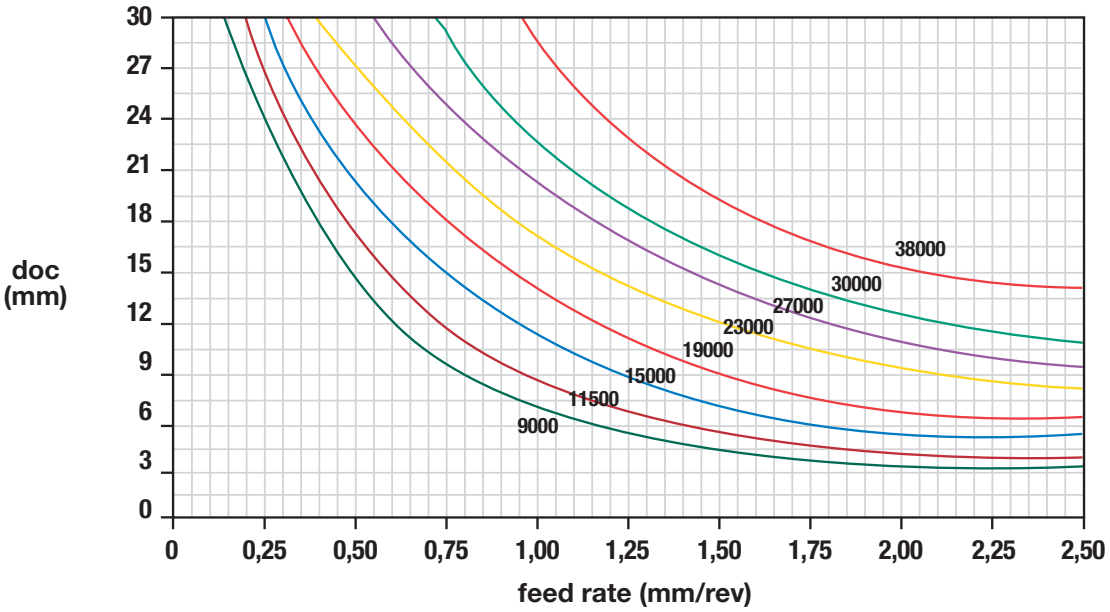

Operating Conditions • KM80TS™ and KM80ATC™ • Inch

IMPORTANT
Information shown on the following charts was developed exclusively for use with KM tooling in static conditions. Do not use for any other tooling system because the results will not apply. To account for cutting force fluctuations in dynamic conditions, a reduction of 20–30% should be applied to the loads shown in charts.

Chart 9

F and L1 Dimensions (inch) vs. Tangential Loads (lbs) for KM80TS and KM80ATC

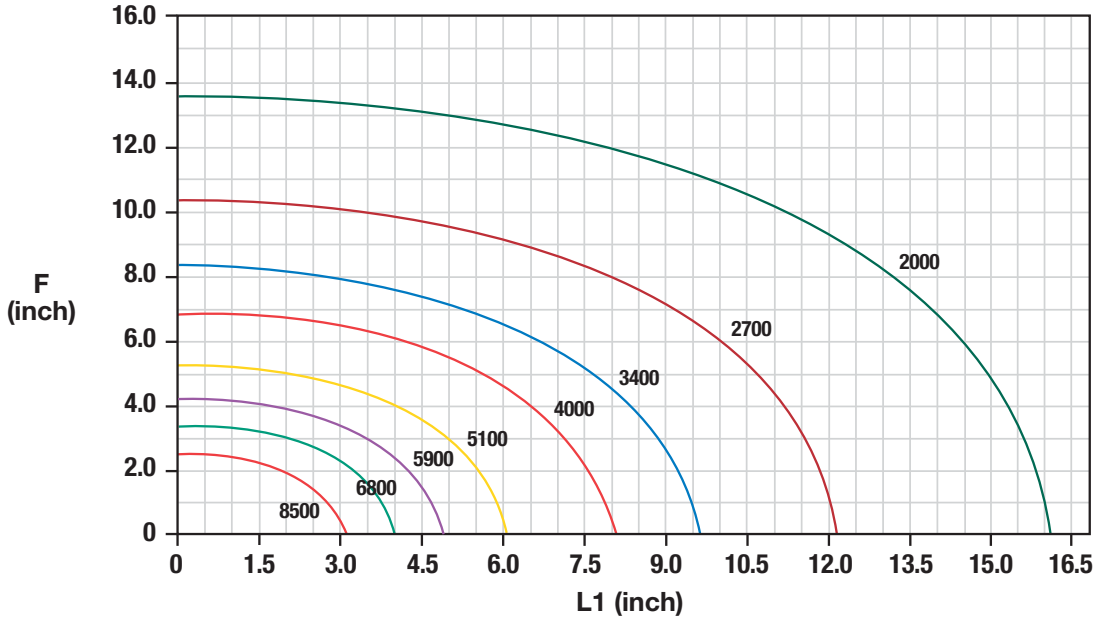

Chart 10

Depth of Cut (inch) and Feed Rate (IPR) vs. Tangential Forces (lbs) for KM80TS and KM80ATC

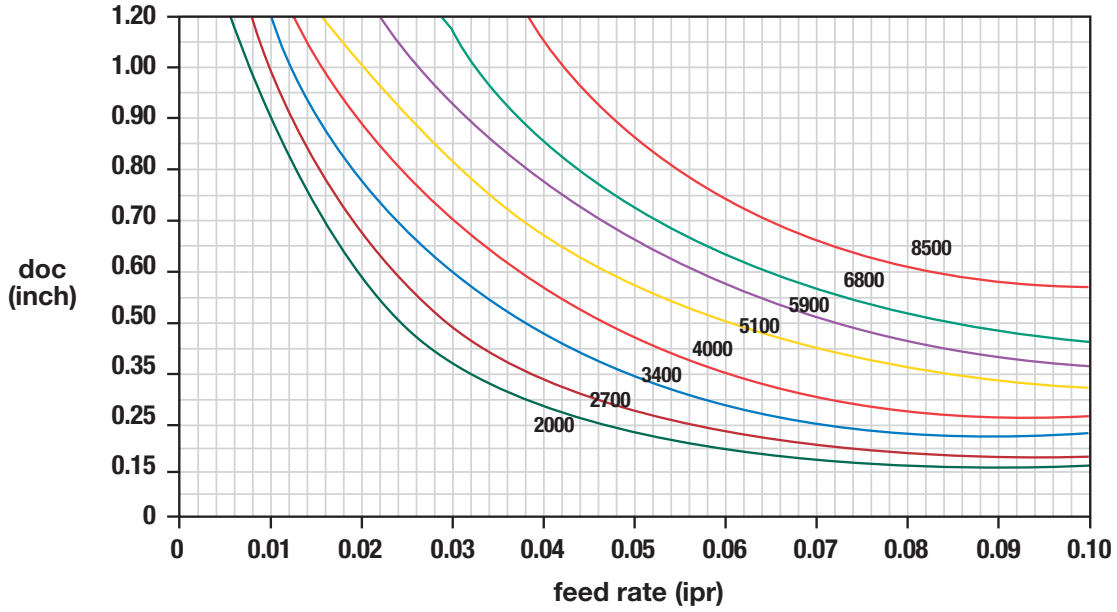

VDI Application Guide

Clockwise Spindle Rotation

VDI Clamp Wedge • Top

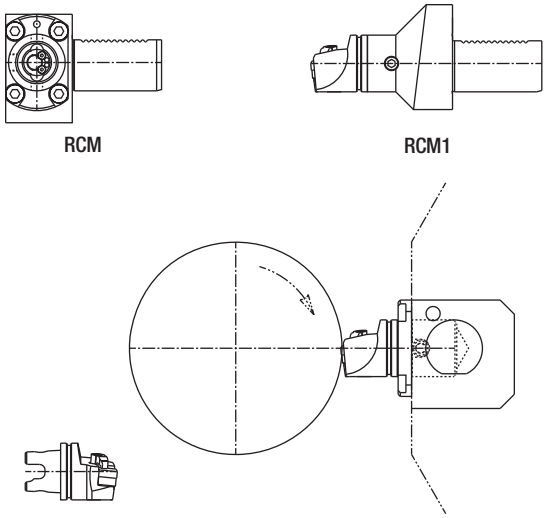

left-hand KM units and bars

VDI Clamp Wedge • Bottom

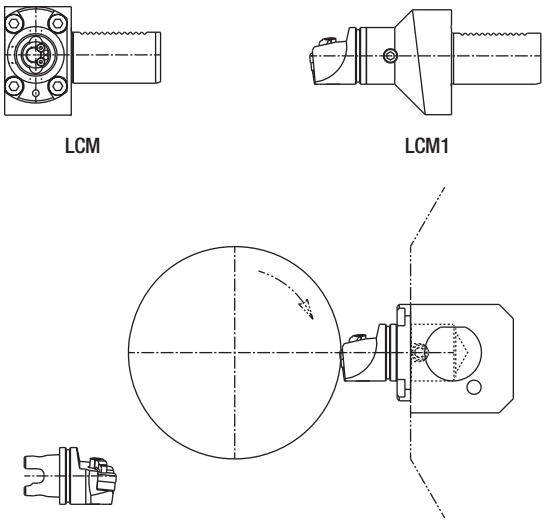

left-hand KM units and bars

Counterclockwise Spindle Rotation

VDI Clamp Wedge • Top

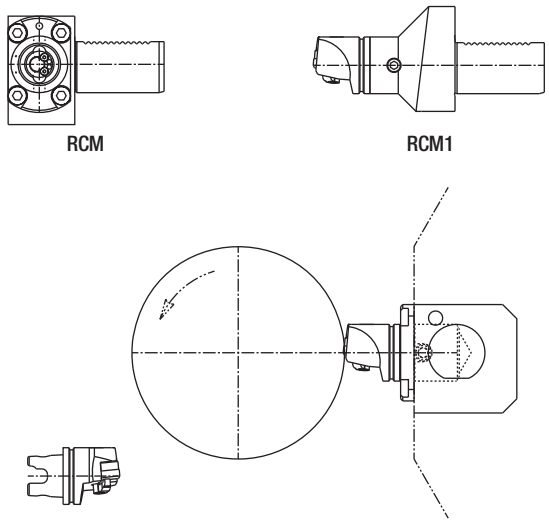

right-hand KM units and bars

VDI Clamp Wedge • Bottom

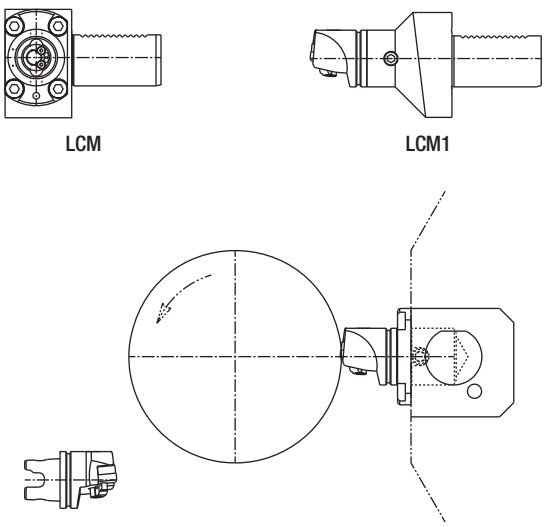

right-hand KM units and bars

Mounting Details • NCM Square Shank Conversion

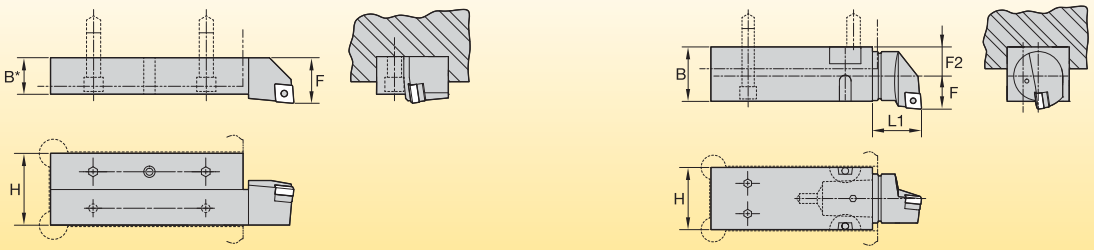

KM Toolholder Replacement — Square Shank Toolholder — Style MCLNL shown

Toolholder Replacements • Metric

KM replacement unit	square shank equivalent	B*	B	H	L1	F	F2
KM32-NCM4040	20 x 20	20	40	40	45	22	23
KM32-NCM5040	25 x 25	25	40	50	45	22	23
KM40-NCM5044	25 x 25	25	44	50	40	27	23
KM40-NCM6444	32 x 32	32	44	64	40	27	23
KM50-NCM6454	32 x 32	32	54	64	50	35	28

*For MCLNR/L holders.

Toolholder Replacements • Inch

KM replacement unit	square shank equivalent	B*	B	H	L1	F	F2
KM32-NCM2425	3/4 x 3/4	3/4	1.562	1.500	1.378	0.866	0.884
KM32-NCM3225	1 x 1	1	1.562	2.000	1.378	0.866	0.884
KM40-NCM3228	1 x 1	1	1.750	2.000	1.575	1.063	0.937
KM40-NCM4028	1-1/4 x 1-1/4	1-1/4	1.750	2.500	1.575	1.063	0.937
KM50-NCM4034	1-1/4 x 1-1/4	1-1/4	2.125	2.500	1.969	1.378	1.122

*For MCLNR/L holders.

NOTE: F equals the dimension from the centerline of the KM cutting unit over the nose radius of the gage insert.
F2 equals the dimension from the back of the clamping unit to the centerline of the KM cutting unit (see column F2 above).
The offset is identical with most KM cutting units, except for positive lead angle units and neutral units.

KM Manual NCM-F Flanges

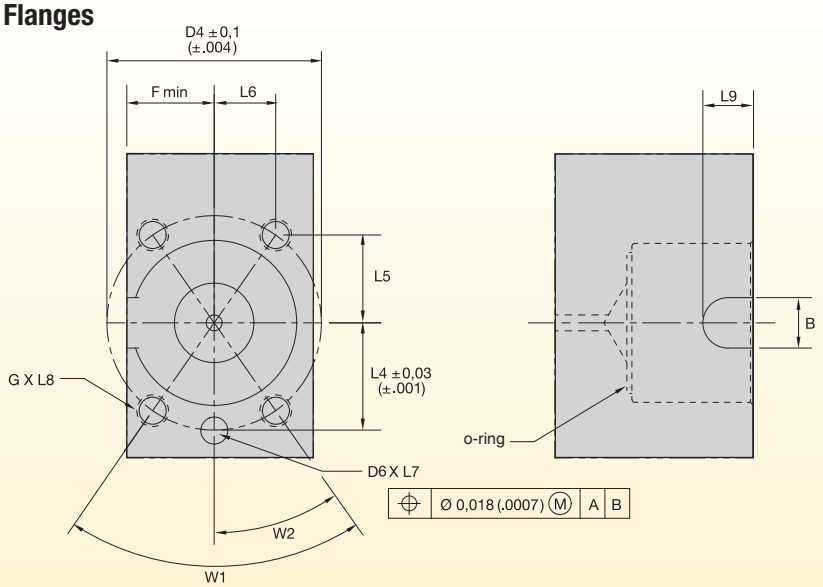

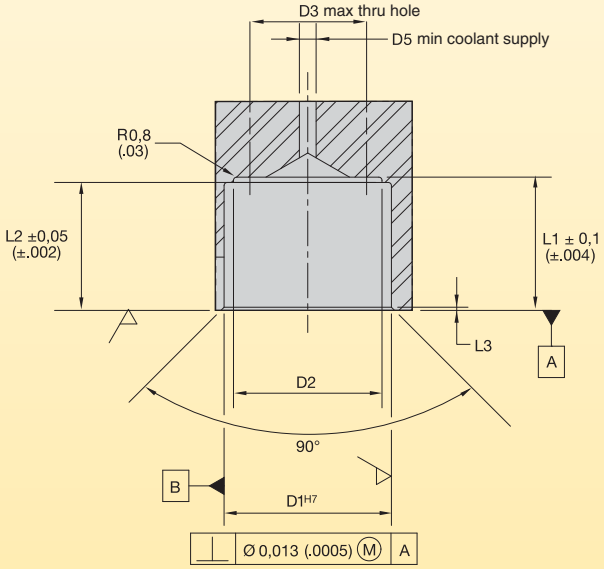

KM size	D1	D2	D3	D4	D5	D6	F	L1	L2	L3	L4	L5	L6	L7	L8	L9	B	G	W1	W2	O-ring
KM32	32,02 1.261	30,30 1.193	24,00 0.945	43,00 1.693	4,00 0.157	6,370/ 6,348 .2508/ .2499	18,01 0.709	26,37 1.038	25,20 0.992	0,50 0.020	21,50 0.847	17,61 0.693	12,33 0.486	11,18 0.440	11,00 0.433	11,51 0.453	11,00 0.433	M6	70°	35°	OR00987103V75
KM40	40,02 1.575	35,51 1.398	29,01 1.142	54,00 2.126	5,00 0.197	6,370/ 6,348 .2508/ .2499	22,00 0.866	31,88 1.255	30,61 1.205	0,80 0.031	27,00 1.063	22,12 0.871	15,49 0.610	11,18 0.440	18,01 0.709	12,75 0.502	12,70 0.500	M8	70°	35°	OR01174103V75
KM50	50,03 1.970	42,80 1.685	37,01 1.457	67,01 2.638	6,50 0.256	7,958/ 7,935 .3133/ .3124	27,51 1.083	39,88 1.570	38,61 1.070	1,00 0.039	33,50 1.319	27,44 1.080	19,22 0.757	12,70 0.500	18,01 0.709	18,24 0.718	17,50 0.689	M10	70°	35°	OR1487103V75
KM63	63,03 2.481	53,90 2.122	48,01 1.890	81,99 3.228	8,00 0.315	14,079/ 14,054 .5543/ .5533	35,99 1.417	46,89 1.846	45,62 1.796	1,50 0.059	41,00 1.614	31,70 1.248	25,99 1.023	19,99 0.787	35,00 1.378	23,50 0.925	21,49 0.846	M12	78°42'	39°21'	OR01925103V75
KM80	80,03 3.151	66,60 2.622	60,00 2.362	105,00 4.134	9,00 0.354	16,079/ 16,054 .6330/ .6320	45,00 1.772	58,39 2.300	57,12 2.249	1,50 0.059	52,50 2.067	41,61 1.638	32,01 1.260	25,00 0.984	50,00 1.969	23,50 0.925	23,00 0.906	M16	75°8'	37°34'	OR02425103V75

NOTE: Contact Kennametal for the latest dimensional data.

KM LOC-II™ CL2NS/T-EF Flanges • KM Manual NCM-EF Flanges

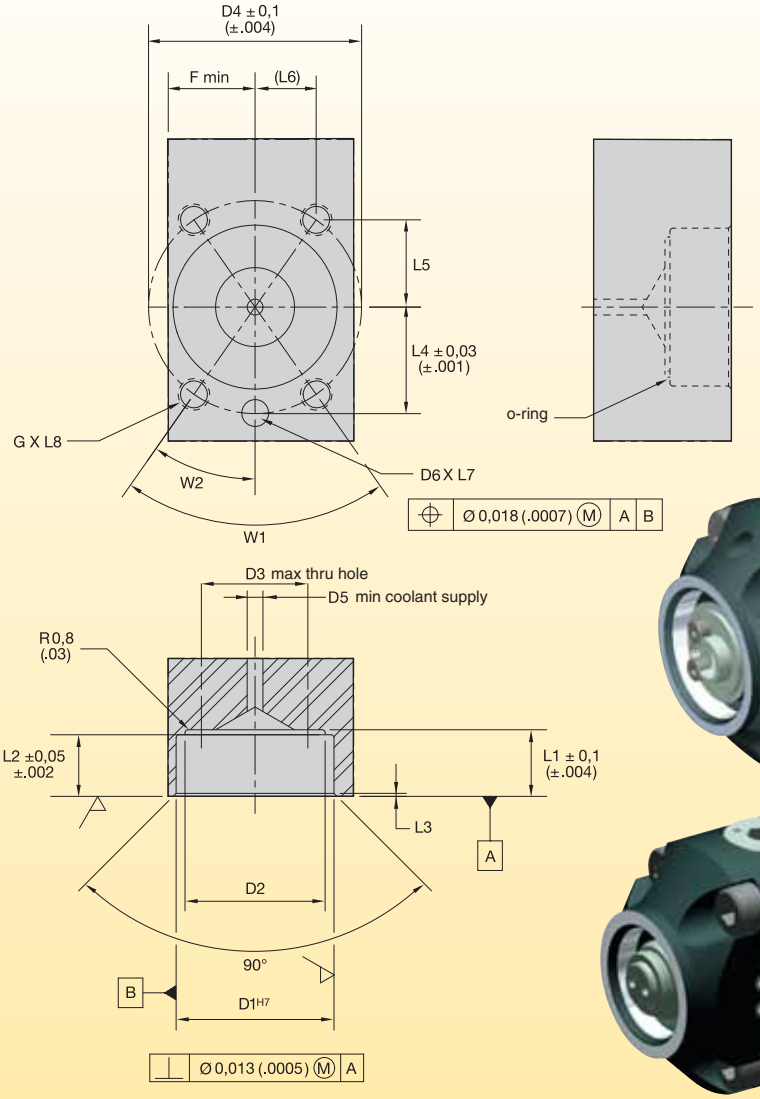

KM size	D1	D2	D3	D4	D5	D6	F	L1	L2	L3	L4	L5	L6	L7	L8	G	W1	W2	O-ring
KM32	32,02 1.261	30,30 1.193	24,00 0.945	43,00 1.693	4,00 0.157	6,370/6,348 .2508/.2499	18,01 0.709	13,87 0.546	12,70 0.500	0,50 0.020	21,50 0.847	17,61 0.693	12,33 0.486	11,18 0.440	11,00 0.433	M6	70°	35°	OR00987103V75
KM40	40,02 1.575	35,51 1.398	29,01 1.142	54,00 2.126	5,00 0.197	6,370/6,348 .2508/.2499	22,00 0.866	16,89 0.665	15,62 0.615	0,80 0.031	27,00 1.063	22,12 0.871	15,49 0.610	11,18 0.440	18,01 0.709	M8	70°	35°	OR01174103V75
KM50	50,03 1.97	42,80 1.685	37,01 1.457	67,01 2.638	6,50 0.256	7,958/7,935 .3133/.3124	27,51 1.083	21,87 0.861	20,60 0.811	1,00 0.039	33,50 1.319	27,44 1.080	19,22 0.757	12,70 0.500	18,01 0.709	M10	70°	35°	OR1487103V75
KM63	63,03 2.481	53,90 2.122	48,01 1.890	81,99 3.228	8,00 0.315	14,079/14,054 .5543/.5533	35,99 1.417	21,87 0.861	20,60 0.811	1,50 0.059	41,00 1.614	31,70 1.248	25,99 1.023	19,99 0.787	30,00 1.181	M12	78°42'	39°21'	OR01925103V75
KM80	80,03 3.151	66,60 2.622	60,00 2.362	105,00 4.134	9,00 0.354	16,079/16,054 .6330/.6320	45,00 1.772	26,89 1.059	25,62 1.009	1,50 0.059	52,50 2.067	41,61 1.638	32,01 1.260	25,00 0.984	50,00 1.969	M16	75°8'	37°34'	OR02425103V75

KM Rapid RNS-EF

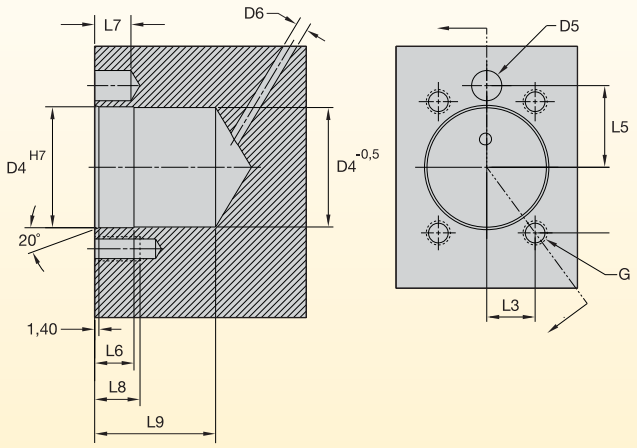

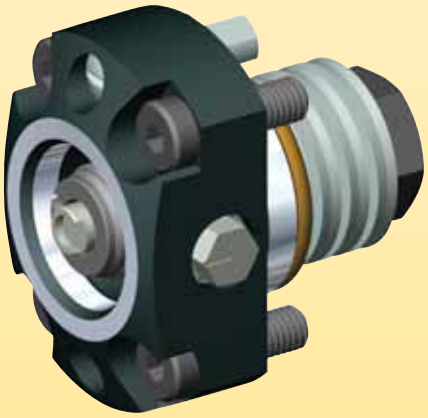

KM size	D4	D5 H11	D6	L3	L4	L5	L6	L7	L8	L9 min	G
KM40	40	10	5	16	21,7	27	13	12	15	44	M8
KM50	50	12	6,5	20	28,7	35	16	14	20	46	M10
KM63	63	14	8	26	31,7	41	20	16	24	52	M12

NOTE: Chart values shown are metric.

KM Rapid Plus RPNT-F

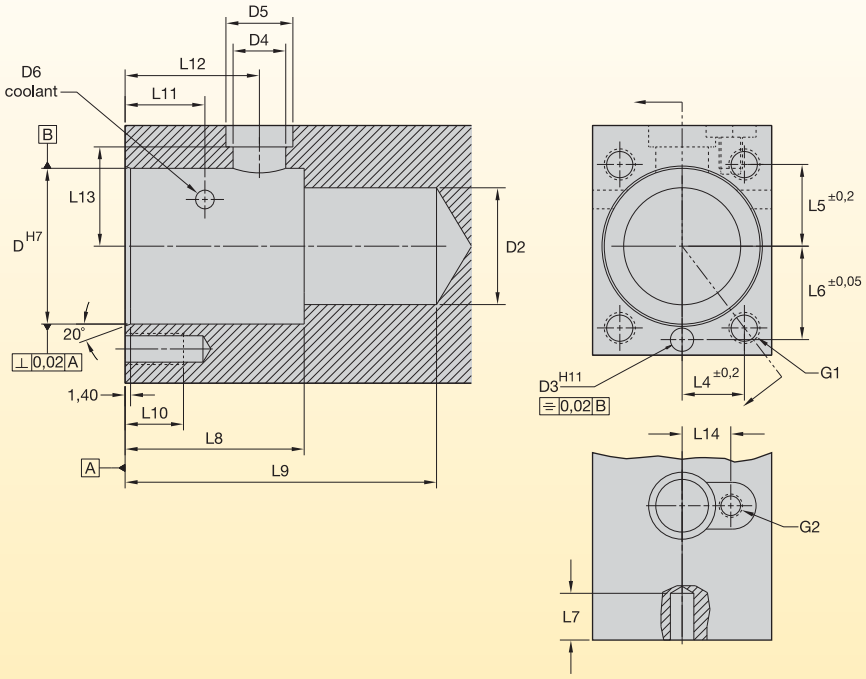

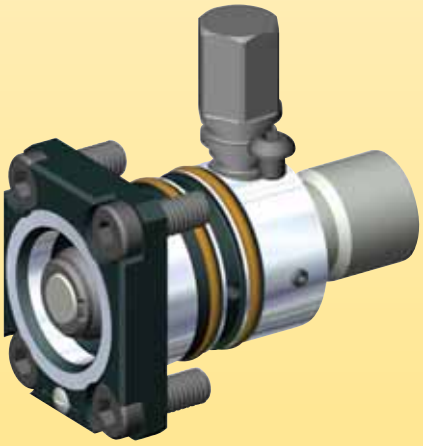

KM size	D	D2	D3	D4	D5	D6	L4	L5	L6	L7	L8	L9	L10	L11	L12	L13	L14	G1	G2	screw DIN-ISO 7380
KM40	40	30	6	13.5	17.2	5	16	21	24	12	46	80	15	20.5	34.5	25.5	12.5	M8	M6	M6x6
KM50	50	40	6	18.5	22.2	8	20	25.5	29.2	12	59	105	25	26	43.8	33.5	16.5	M10	M8	M8x10
KM63	63	45	10	24.5	28.5	8	26	31.7	38.5	20	18	120	30	35	58.5	41.3	19.5	M12	M8	M8x10

NOTE: Chart values shown are metric.

KM-LOC™ CLNS/T-EF

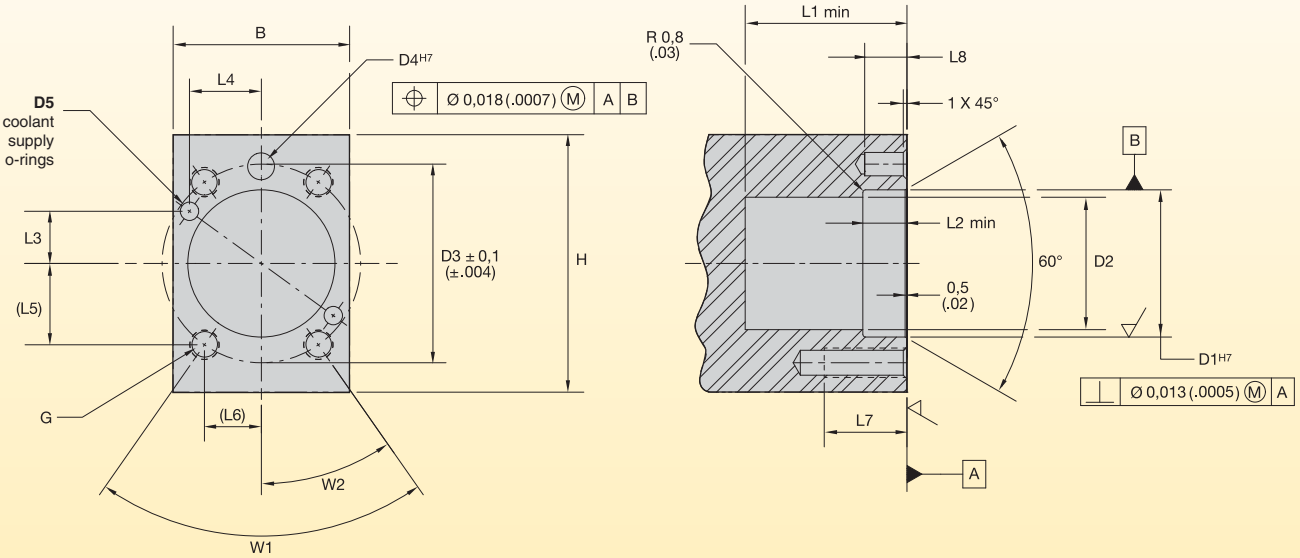

KM size	D1	D2	D3	D4	L1	L2	L3	L4	L5	L6	L7	L8	B	G	H	W1	W2	O-ring
KM32	32,00 1.260	30,00 1.181	43,00 1.693	6,35 0.250	30,00 1.181	10,00 0.394	11,30 0.445	16,15 0.646	17,6 0.693	12,30 0.484	19,50 0.768	11,50 0.453	40,00 1.575	M6	60,00	70º	35º	OR00145070V75
KM40	40,00 1.575	36,00 1.417	54,00 2.126	6,35 0.250	44,00 1.732	12,00 0.472	14,18 0,558	19,56 0,770	22,10 0.870	15,50 0.610	22,50 0.886	11,50 0.453	48,00 1.890	M8	70,00	70º	35º	OR00176070V75
KM50	50,00 1.969	47,00 1.850	67,00 2.638	7,95 0.313	49,00 1.929	14,00 0.551	18,25 0.719	23,90 0.941	27,40 1.079	19,20 0.756	25,50 1.004	13,00 0.512	58,00 2.283	M10	85,00	70º	35º	OR00208070V75

KM LOC-II™ CL2NS/T-BC Boring Cartridge

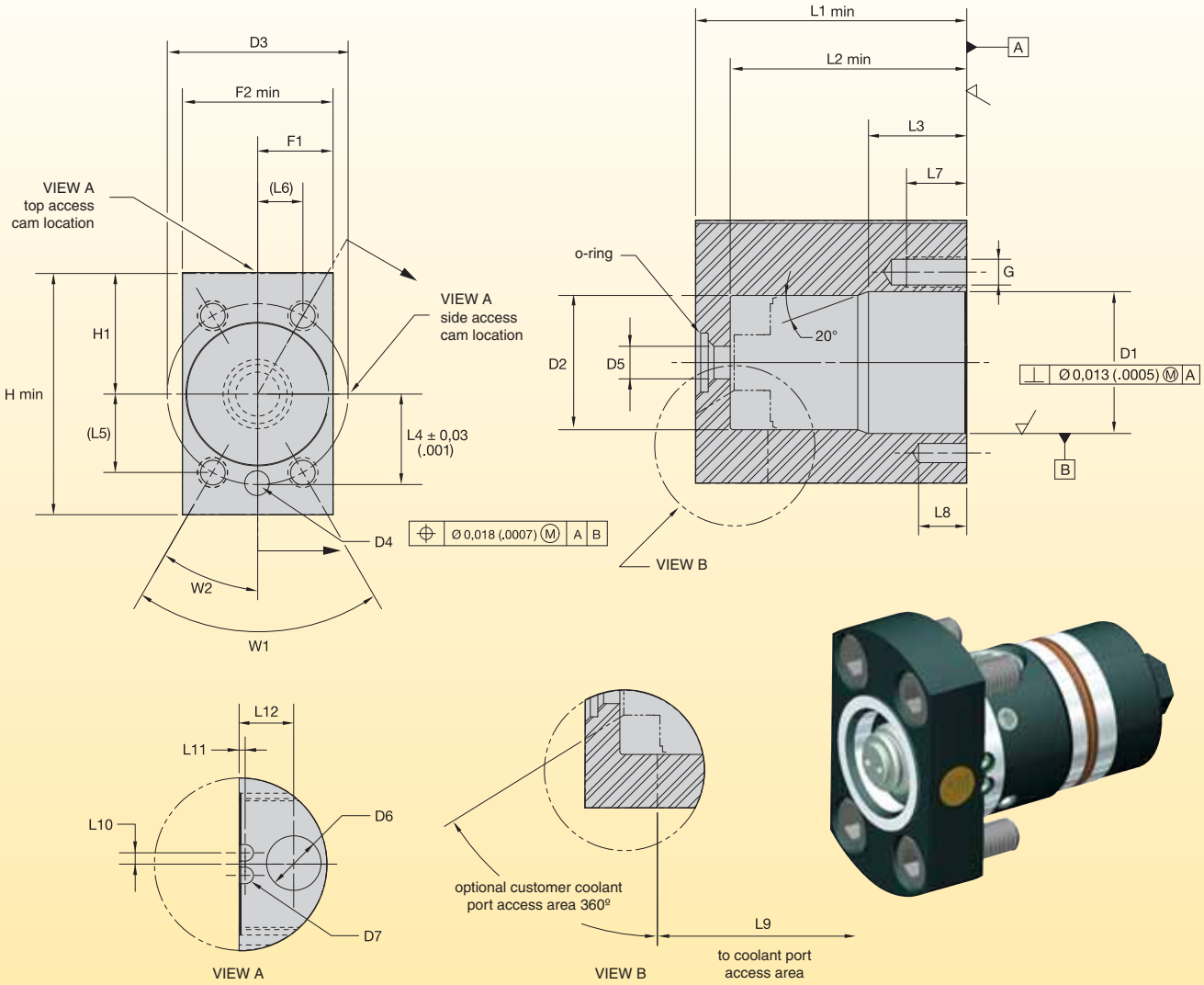

KM size	D1	D2	D3	D4	D5	D6	D7	F	F1	H	H1	L1	L2
KM40	47,04 1.852	44,54 1.754	60,00 2.362	6,36 0.250	10,80 0.425	15,00 0.591	5,50 0.217	50,00 1.969	25,00 0.984	80,00 3.150	40,00 1.575	90,00 3.543	78,50 3.091
KM50	58,29 2.295	54,10 2.130	74,00 2.913	7,94 0.313	10,80 0.425	18,00 0.709	6,50 0.256	64,00 2.520	32,00 1.260	96,00 3.780	48,00 1.890	100,00 3.937	88,00 3.465
KM63	74,04 2.915	69,92 2.753	94,00 3.701	14,04 0.553	12,80 0.504	20,00 0.787	6,50 0.256	78,00 3.071	39,00 1.535	122,00 4.803	61,00 2.402	115,00 4.528	100,80 1.535

KM size	L3	L4	L5	L6	L7	L8	L9	L10	L11	L12	G	W1	W2	O-ring
KM40	32,75 1.289	30,00 1.181	25,98 1.023	15,00 0.591	20,00 0.787	16,00 0.630	65,50 2.579	3,75 0.148	2,00 0.079	18,10 0.713	M10	60	30	OR00614070V90
KM50	38,00 1.496	37,00 1.457	32,04 1.261	18,50 0.728	21,00 0.827	16,00 0.630	75,75 2.982	5,30 0.209	6,75 0.266	24,25 0.955	M12	60	30	OR00614070V90
KM63	47,20 1.858	47,00 1.850	40,70 1.602	23,50 0.925	20,00 0.787	16,00 0.630	87,50 3.445	6,45 0.254	5,00 0.197	26,00 1.024	M16	60	30	OR00739070V90

KM RACA and NAC

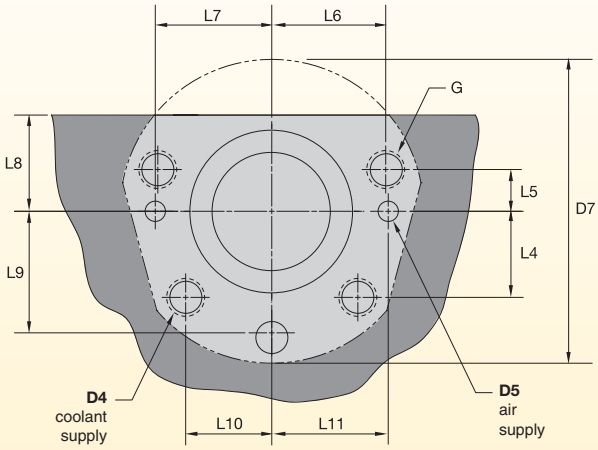

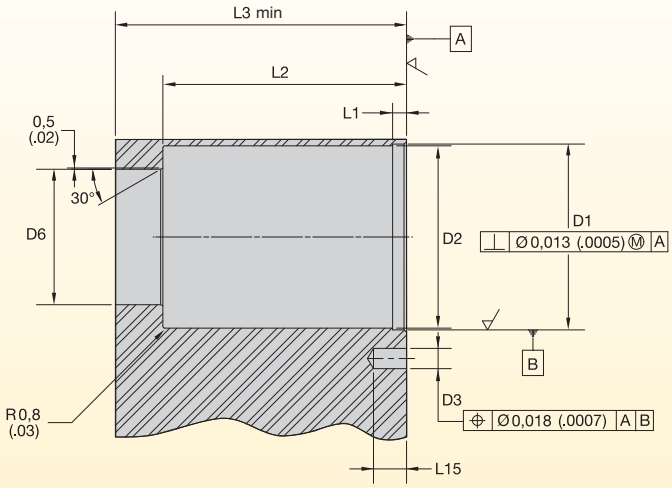

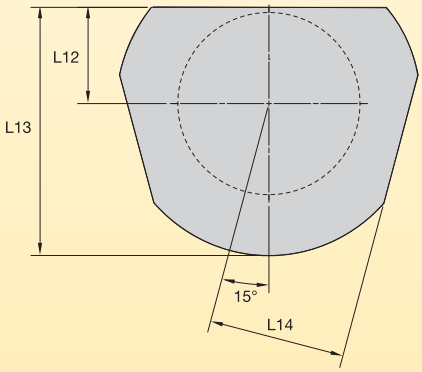

KM size	D1	D2	D3	D4	D5	D6	D7	L1	L2	L3	L4
KM32	52,00 2.047	51,60 2.032	10,08 0.397	5,00 0.196	5,00 0.196	47,08 1.853	85,00 3.346	9,00 0.354	72,00 2.835	85,00 3.346	24,00 0.945
KM40	62,00 2.441	61,70 2.421	10,08 0.397	7,70 0.303	7,70 0.303	55,08 2.168	100,00 3.937	10,00 0.394	78,50 3.091	95,00 3.74	30,00 1.181
KM50	72,00 2.835	71,70 2.815	12,08 0.475	8,00 0.315	8,00 0.315	65,08 2.562	120,00 4.724	10,00 0.394	97,00 3.819	115,00 4.528	34,00 1.339
KM63	85,00 3.346	84,60 3.327	16,08 0.633	9,50 0.374	9,50 0.374	75,08 2.956	140,00 5.512	12,00 0.472	124,50 4.902	145,00 5.709	35,35 1.392

KM size	L5	L6	L7	L8	L9	L10	L11	L12	L13	L14	L15	G
KM32	11,50 0.453	32,00 1.260	32,00 1.260	27,50 1.083	34,00 1.339	24,00 0.945	32,00 0.945	27,50 1.083	70,00 2.756	38,00 1.496	14.50 0.571	M8-1,25x20 (.79) deep
KM40	15,00 0.591	37,00 1.457	39,50 1.555	33,00 1.299	40,00 1.575	26,50 1.043	39,50 1.043	34,00 1.339	84,00 3.307	46,00 1.811	22.00 0.866	M10-1,5x25 (.98) deep
KM50	16,50 0.650	45,00 1.772	46,00 1.811	42,00 1.654	48,00 1.890	34,00 1.339	46,00 1.339	42,00 1.654	102,00 4.016	54,00 2.126	22.00 0.866	M12-1,75x25 (.98) deep
KM63	18,80 0.740	51,70 2.035	55,00 2.165	46,00 1.811	55,00 2.165	42,15 1.659	55,00 1.659	47,00 1.850	117,00 4.606	65,00 2.559	24.00 0.945	M16-2,0x30 (1.18) deep

KM RACA and NACA Spring-Pack Cylinder

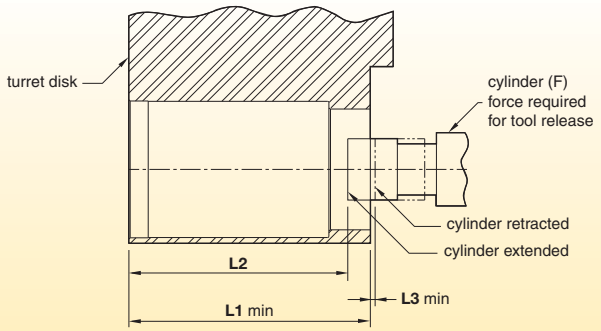

KM size	L1	L2	L3
KM32	85,00 3.346	76,50 3.012	3,00 0.118
KM40	95,00 3.740	83,20 3.276	3,00 0.118
KM50	115,00 4.528	103,00 4.055	3,00 0.118
KM63	145,00 5.709	131,00 5.157	3,00 0.118

NCA Spring-Pack Mounting Details

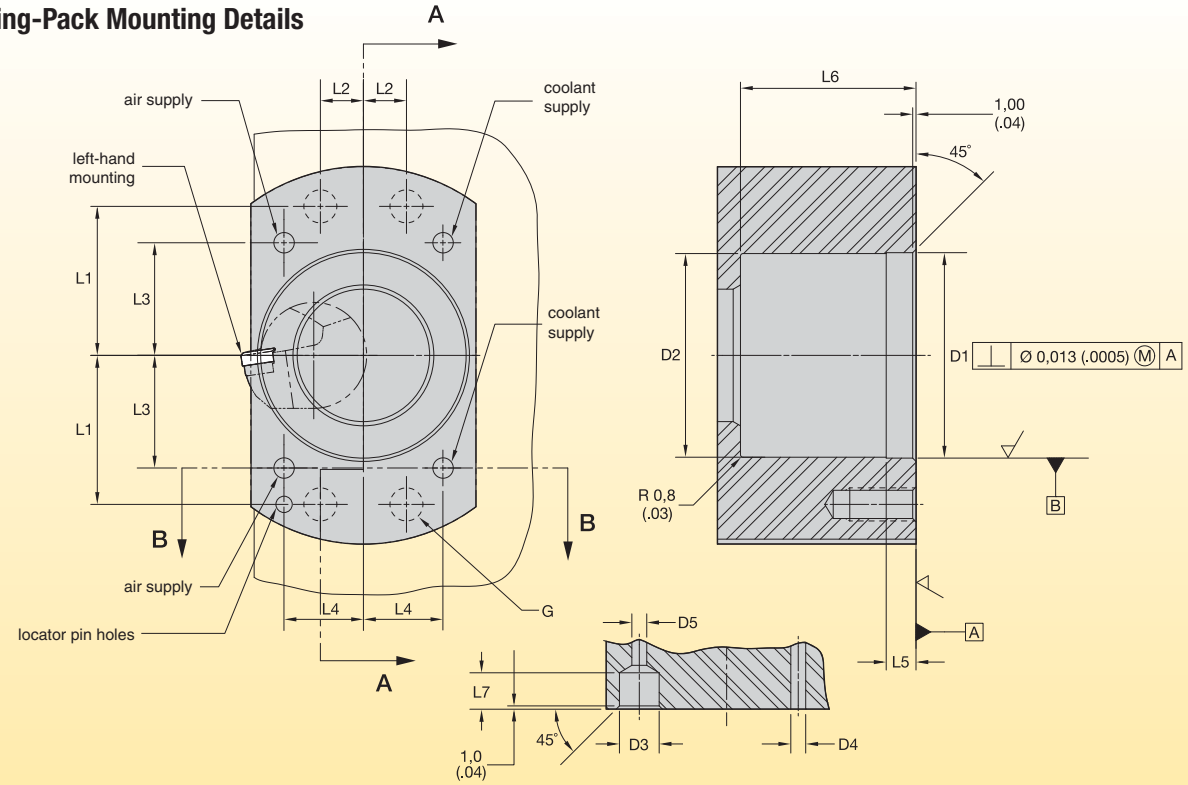

KM size	D1	D2	D3	D4	D5	L1	L2	L3	L4	L5	L6	L7	G
KM32-NCA-DS31	51,00 2.008	50,50 1.988	8,00 0.315	3,20 0.126	3,20 0.126	36,00 1.417	10,50 0.413	27,50 1.083	19,50 0.768	6,00 0.236	44,00 1.732	9,00 0.354	M8-1,25x20 (.79) deep
KM40-NCA-DS40	62,00 2.441	61,50 2.421	12,00 0.472	4,50 0.177	4,50 0.177	45,00 1.772	13,00 0.512	34,01 1.339	24,00 0.945	9,00 0.354	53,01 2.087	11,00 0.433	M10-1,5x20 (.79) deep
KM50-NCA-DS50	78,00 3.071	71,50 2.815	15,00 0.591	5,50 0.217	5,50 0.217	56,00 2.205	16,00 0.630	42,00 1.654	28,00 1.102	6,00 0.236	74,00 2.913	12,00 0.472	M12-1,75x30 (1.18) deep

KM32 NCA

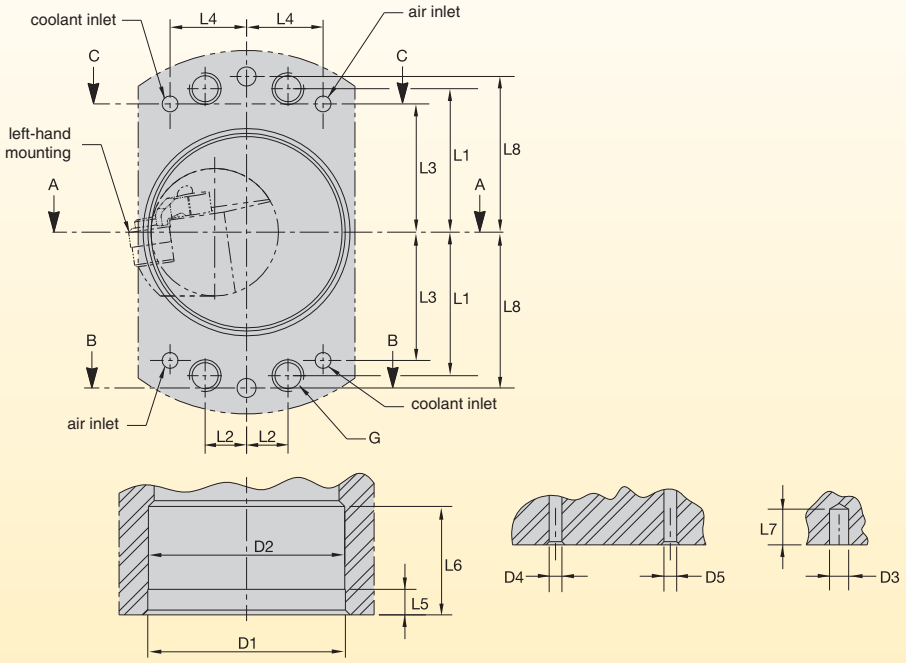

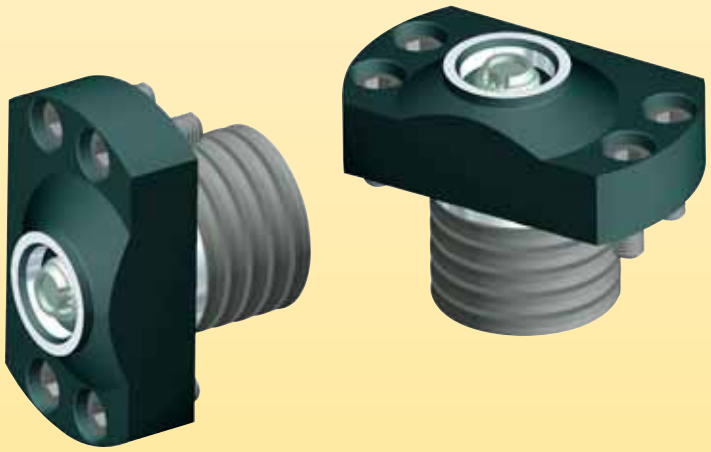

KM size	D1	D2	D3	D4	D5	L1	L2	L3	L4	L5	L6	L7	L8	G
KM32-NCA-DS16	51,00 2.008	50,80 2.000	6,04 0.238	5,00 0.197	5,00 0.197	29,37 1.156	10,69 0.421	23,93 0.942	20,09 0.791	20,00 0.787	65,00 2.559	11,20 0.441	32,25 1.270	M8-1,25x15 (.59) deep

XGL – Static

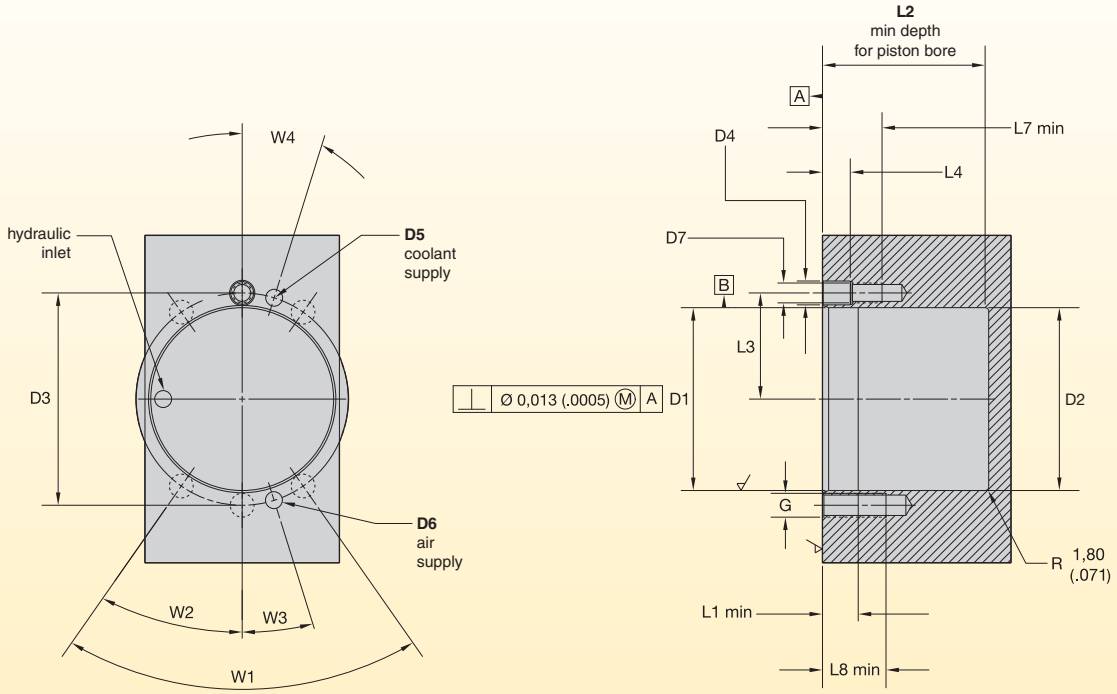

KM size	D1	D2	D3	D4	D5	D6	D7	G	L1	L2	L3	L4	L7	L8	W1	W2	W3	W4
KM80	92,177 3.629	92,177 3.629	107,00 4.213	12,045 .4742	6,35 0.25	6,35 0.25	M10	M12	18,00 0.709	81,95 3.226	53,525 2.107	14,00 0.551	30,00 1.181	32,00 1.26	70°	35°	17"30'	17"30'

The KM Micro/KM Mini Coupling

The rigidity and stiffness of the patented KM Micro/KM Mini joint is achieved through a combination of unique design elements incorporated in both the shank of the tool and the clamping mechanism. The KM Micro/KM Mini joint was developed as a system and takes full advantage of both the tool shank and the mechanism to obtain maximum benefit from the space utilized.

Taper Shank

All KM Micro/KM Mini tooling is designed around a short 10:1 tapered shank. Extensive testing of many different lengths and angles proves this combination provides the maximum stiffness and input forces required for locking/unlocking. The taper is self-centering to promote easy tool loading and unloading.

Face and Taper Contact

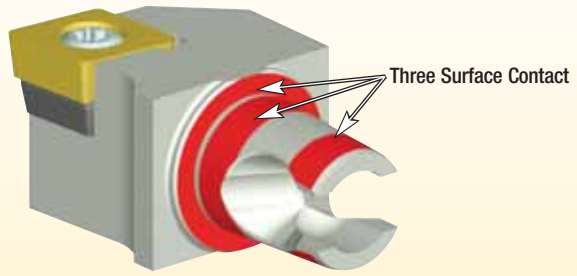

KM Micro/KM Mini tooling is designed to have simultaneous taper and face contact. Two alternate methods provide metal-to-metal contact. One method is to manufacture both halves of the coupling holding very close tolerances. The other is to design a small amount of elastic deformation into the assembly. With KM Micro/KM Mini tooling, elastic deformation takes the form of expansion of the female taper (on the clamping unit) as the larger male taper (on the cutting unit) is pulled back during lockup.

Our testing proved that an optimum combination of pull-back force and elastic deformation (rather than a close tolerance) provides greater static and dynamic stiffness and achieves a metal-to-metal fit.

Clamping Mechanism

The mechanism design consists of two components: the torque screw and the wedge nut. This simple, yet highly effective clamping mechanism allows the user to lock and unlock the cutting unit by simply using a preset torque wrench. This KM Micro/KM Mini clamping mechanism fits inside the taper shank of the KM Micro/KM Mini cutting unit and utilizes a coincidental cone design that maximizes the contact area between the clamping mechanism and the cutting unit. As a result, the cutting unit and clamping mechanism are on a shared axis and provide accurate axial and radial repeatability of ±.00008" (± 2 micron) for a specific cutting unit in a specific clamping unit.

When more than one cutting unit is used, the accuracy of each cutting unit must be considered. Pre-gaging (when changing tools) measures the deviations of each tool from the nominal. These deviations can then be compensated for by the machine tool control offsets.

Locking Sequence

The clamping sequence starts with the insertion of the cutting unit into the female taper of the clamping unit. The cutting unit first makes contact at a stand-off from the gage face of approximately .010" (0,25mm). The torque screw is then activated by a preset torque wrench at a right angle to the centerline of the cutting tool, located behind the gage face of the clamping unit. A small amount of elastic deformation takes place at the front of the female taper as the locking force is applied. As the torque screw is further tightened to the preset torque of 25–30 ft. lbs. (34–40 Nm), (4-1/4 turns), the cutting unit advances until the gage face makes contact with the face of the clamping unit. The final amount of torque applied allows the tail of the cutting unit to spread to clamp securely between the clamping mechanism and the clamping unit inside diameter. Once the proper operational torque is achieved, continuing to rotate the torque screw may damage the clamping components.

Installation

When initially clamping the KM Micro/KM Mini shank in a machine tool slot, it is recommended to have a cutting unit in the shank.

Lubrication

Using the appropriate wrench, back out the torque screw against the positive stop and generously apply grease to the threads and conical surface of the component hardware. Also, apply grease to the female taper surface. This should be done periodically. Recommended grease: GLEITMO™ 805.

lubricant	order number	size
GLEITMO 805 grease	1567575	500g cartridge
GLEITMO 805 grease	1567577	1000g tin

CAUTION
DO NOT USE silicone cleaner or WD-40™-type lubricants.

Summary

The KM Micro/KM Mini coupling offers a very rigid joint with a high degree of repeatability while maintaining a very compact envelope. This permits a high degree of versatility without sacrificing cutting performance.

KM Micro/KM Mini Clamping Operating Instructions (KM12–KM25)

Locking

Before inserting the KM Micro and KM Mini unit into the clamping mechanism (Figure 1), clean the contact face and taper. KM Micro and KM Mini manual clamping units require a torque wrench for proper operation. Turning the torque screw clockwise locks the cutting unit in position. For maximum safety, tighten the torque screw to the specified torque. Using a torque wrench ensures that the proper clamping forces are exerted.

Figure 1

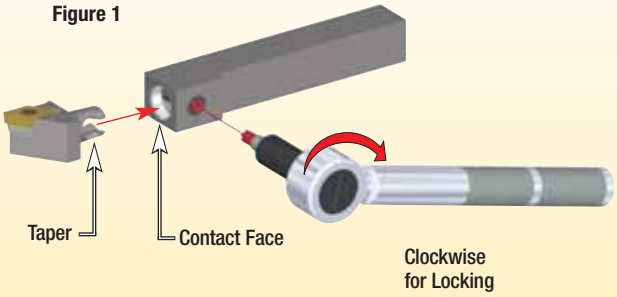

KM Micro/KM Mini Manual Clamping System • Operating Torque

KM size	torque (ft. lbs.)	torque (Nm)	actuation drive size
KM12	5–6	7–8	25IP
KM1612	5–6	7–8	25IP
KM16	7–8	10–11	27IP
KM2016	7–8	10–11	27IP
KM20	14–16	19–22	5mm
KM2520	14–16	19–22	5mm
KM25	25–30	34–40	6mm
KM3225	25–30	34–40	6mm

CAUTION
Over tightening can cause damage to the clamping mechanism.

Operating Position

With the torque screw and nut to the proper torque, coincidental cones locked in position, and the face and self-locking taper fully engaged, the cutting unit and clamping unit are rigidly secured together (Figure 2).

Figure 2

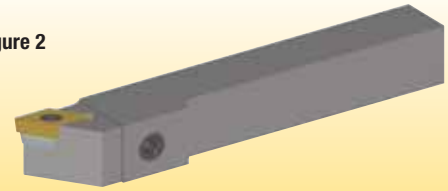

Unlocking

Rotate the torque screw counterclockwise until initial resistance is felt. In this position, the locking cones are free of the cutting unit, but the taper interference is still holding the KM™ unit in the clamping unit. At this point, the bump-off angle is in position to free the cutting unit from the interference fit.

Continue to rotate the torque screw slowly until the cutting unit is no longer making face contact (Figure 3) and is released from the taper. The torque screw will stop rotating and more resistance will be felt. Do not turn the torque screw any further.

Figure 3

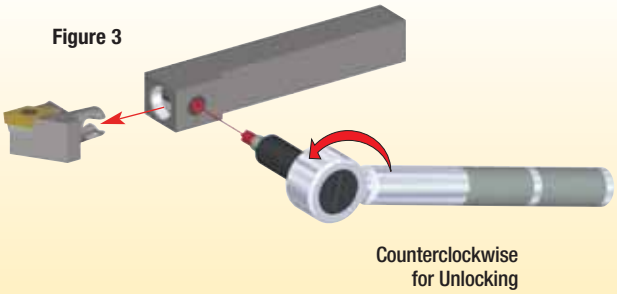

CAUTION
Continuing to rotate the torque screw may damage the clamping components.

KM Micro/KM Mini Center Height Adjustment Feature for Flange Clamping Units

KM Micro flange mounts can adjust insert center height via a cam pin to be purchased separately. To do this:

1. Remove the locating pin that is installed in the flange mount clamping unit.
2. Install the adjusting cam in the toolblock-locating pin hole.
3. Install the flange mount clamping unit to the toolblock, ensuring the cam portion of the adjusting pin locates within the slot on the back side of the flange.
4. To adjust, simply access the hex through the locating pin hole of the flange unit and rotate to set center height with mounting screws loose.
5. Tighten the mounting bolts to the required torque for the specific bolt size.

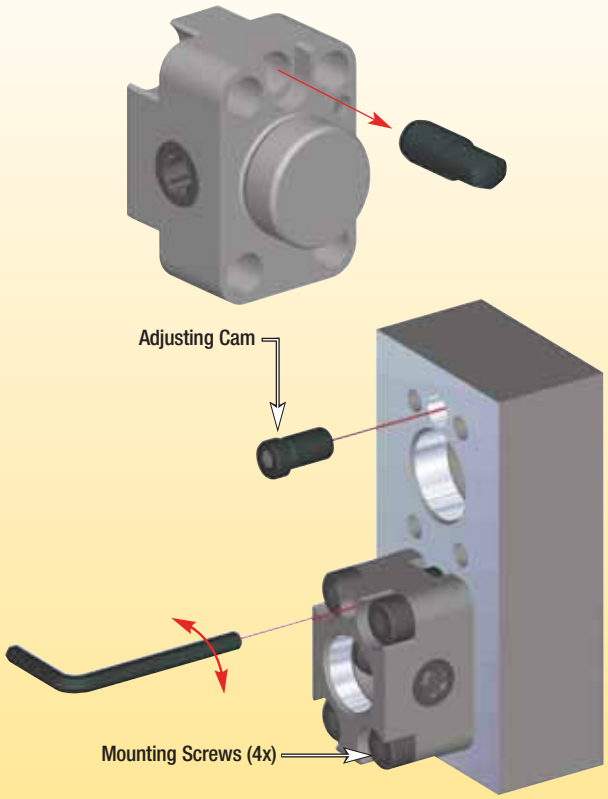

KM size	order number	catalog number
12	1925860	**MICROCAM12**
16, 25, 3225	1851803	**MICROCAM16**

What is KM1612/KM2016/KM2520/KM3225 for ID Machining?

The KM1612/KM2016/KM2520/KM3225 is the ID endworking tooling product line to complement the KM12/KM16/KM20/KM25 OD turning tooling product line.

- Products are through-coolant capable.
- External tapers are the same as KM12/KM16/KM20/KM25.

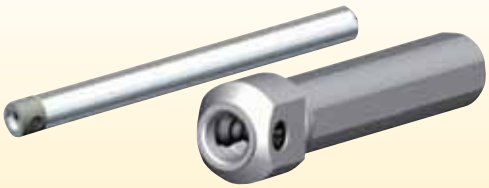

Round shank clamping units

Major difference is center height location of the insert.

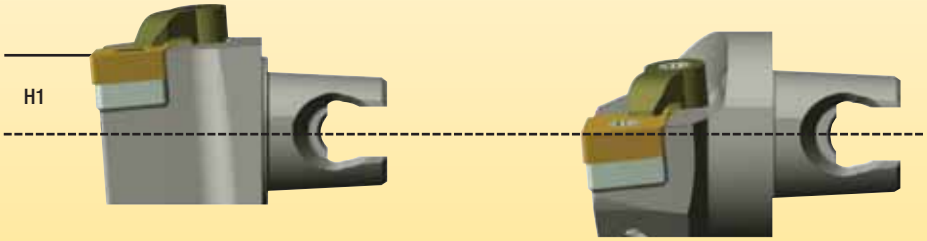

KM12/KM16/KM20/KM25
Square shank cutting units
Insert is above centerline

KM1612/KM2016/KM2520/KM3225
Centerline cutting units
Insert is on centerline

KM Micro/KM Mini Manual Clamping Repair Package Components

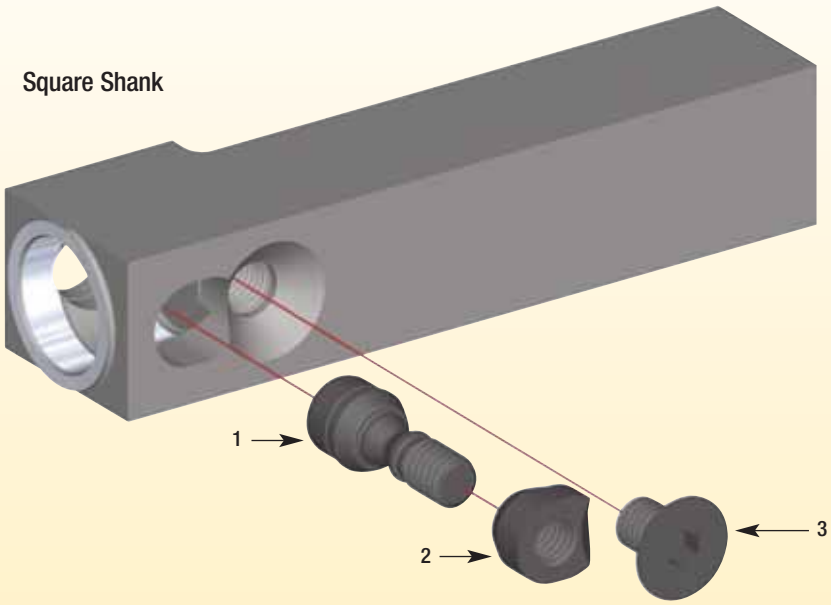

KM Manual Clamping Components • Functional Definitions

1. **Torque Screw**
   - Rotation moves the locking cones.
     - Clockwise rotation secures cutting unit.
     - Counterclockwise rotation releases cutting unit.
   - Provides bump-off angle.

2. **Wedge Nut**
   - Contains anti-rotation feature.

3. **Containment Screw**
   - Provides unlocking positive stop.
   - Provides anchor for wedge nut anti-rotation feature.

Operator Maintenance

All KM Micro/KM Mini clamping units showing damage must be replaced or rebuilt. Burrs and nicks should be removed by stoning and/or polishing.

- Use KM Micro/KM Mini Plugs to protect clamping units when they are not in use.

  For KM Micro Plugs, see page A117.
  For KM Mini Plugs, see page A186.

KM Micro/KM Mini Manual Clamping Repair Packages

KM size	catalog number	order number
KM12	**KM12NAPKG**	**3953388**
KM16	**KM16NAPKG**	**3953386**
KM20	**KM20NAPKG**	**3645146**
KM25	**KM25NAPKG**	**3645145**

KM Micro/KM Mini Manual Clamping Repair Package Components

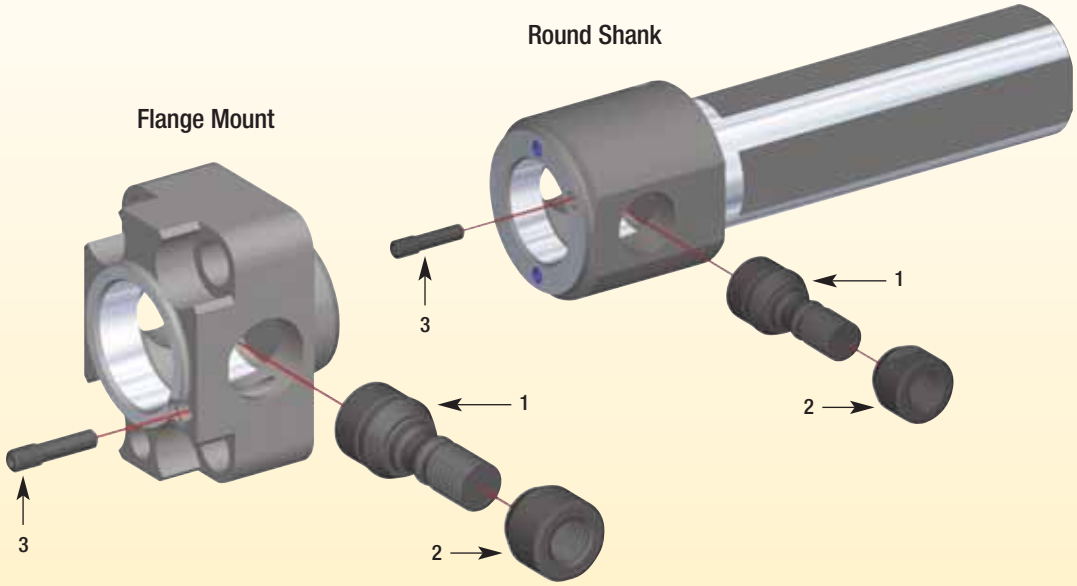

KM Manual Clamping Components • Functional Definitions

1. **Torque Screw**
   - Rotation moves the locking cones.
     - Clockwise rotation secures cutting unit.
     - Counterclockwise rotation releases cutting unit.
   - Provides bump-off angle.

2. **Wedge Nut**
   - Contains anti-rotation feature.

3. **Containment Pin**
   - Provides unlocking positive stop.
   - Provides anchor for wedge nut anti-rotation feature.

Operator Maintenance:
All KM Micro/KM Mini Clamping Units showing damage must be replaced or rebuilt.
Burrs and nicks should be removed by stoning and/or polishing.

- Use KM Micro/KM Mini Plugs to protect clamping units when they are not in use.
  For KM Micro Plugs, see page A117.
  For KM Mini Plugs, see page A186.

KM Micro/KM Mini Manual Clamping Repair Packages

KM size	catalog number	order number
KM12	KM12NRPKG	1925858
KM1612		
KM16	KM16NRPKG	1851801
KM2016		
KM20	KM2520NRPKG	3645148
KM2520		
KM25	KM25NAPKG	2386037
KM3225	KM3225NRPKG	2656552

KM Micro/KM Mini • Assembly/Disassembly Instructions

1. Apply GLEITMO™ 805 grease generously to threads, cones on torque screw and nut, and bump-off area (behind threads) of the torque screw. Also, apply grease generously to the female taper on the shank.
2. Screw the torque screw and the nut together.
3. Insert the torque screw and nut into the shank (as one unit) as shown in (Frame 1).
4. Install the containment screw as shown (Frame 2).
5. When initially clamping the KM Micro shank in a machine tool slot, it is recommended that a cutting unit be in the shank.
6. Disassembly is the reverse of assembly procedure.

Tools Required

- Hex wrenches.
- Pliers.
- Kennametal recommends and uses GLEITMO™ 805.
- Clean towels or shop rags.
- Solvent or degreaser that does not leave residue (used to clean inside the taper and canister). Should the unit become contaminated, you can use a degreasing agent or something similar to clean the surfaces.

CAUTION
DO NOT USE silicone cleaner or WD-40™-type lubricants.

lubricant	order number	size
GLEITMO 805 grease	**1567575**	500g cartridge
GLEITMO 805 grease	**1567577**	1000g tin

Frame 1

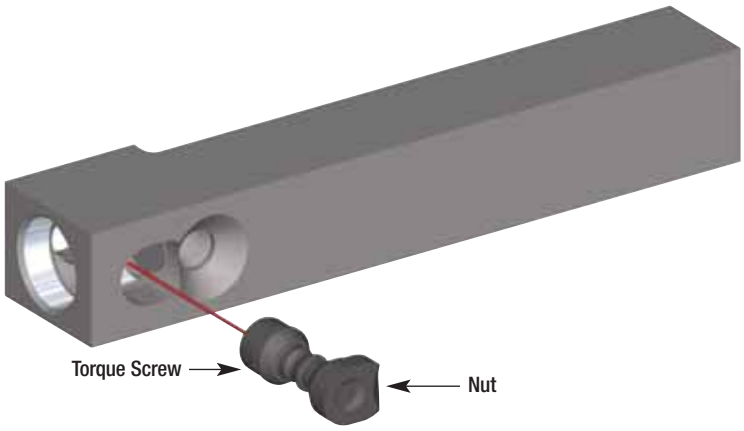

(continued)

KM Micro/KM Mini • Assembly/Disassembly Instructions *(continued)*

Maintenance Schedule

Disassemble the shanks once a month and re-apply new grease. Grease should also be applied 1 or 2 times per week to the torquw screw, nut, and both tapers (internal and external) in the release position without the need to disassemble.

Before re-applying grease, shop air should be used to blow out oil coolant.

If contamination of the grease is evident, then the old grease should be immediately removed and the shank cleaned. Then new grease should be re-applied acording to procedure.

NOTE: Apply grease with a coarse bristle brush to prevent shedding of bristles.

KM size	hex size
KM12	2,5mm
KM16	3mm
KM20	4mm
KM25	5mm

Frame 2

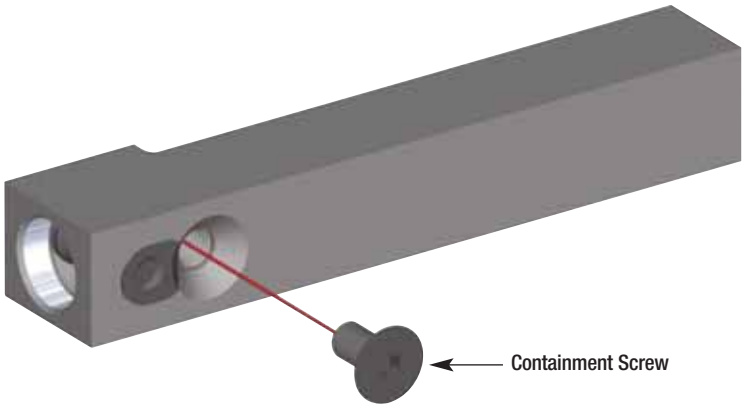

KM Micro/KM Mini NCM-SF

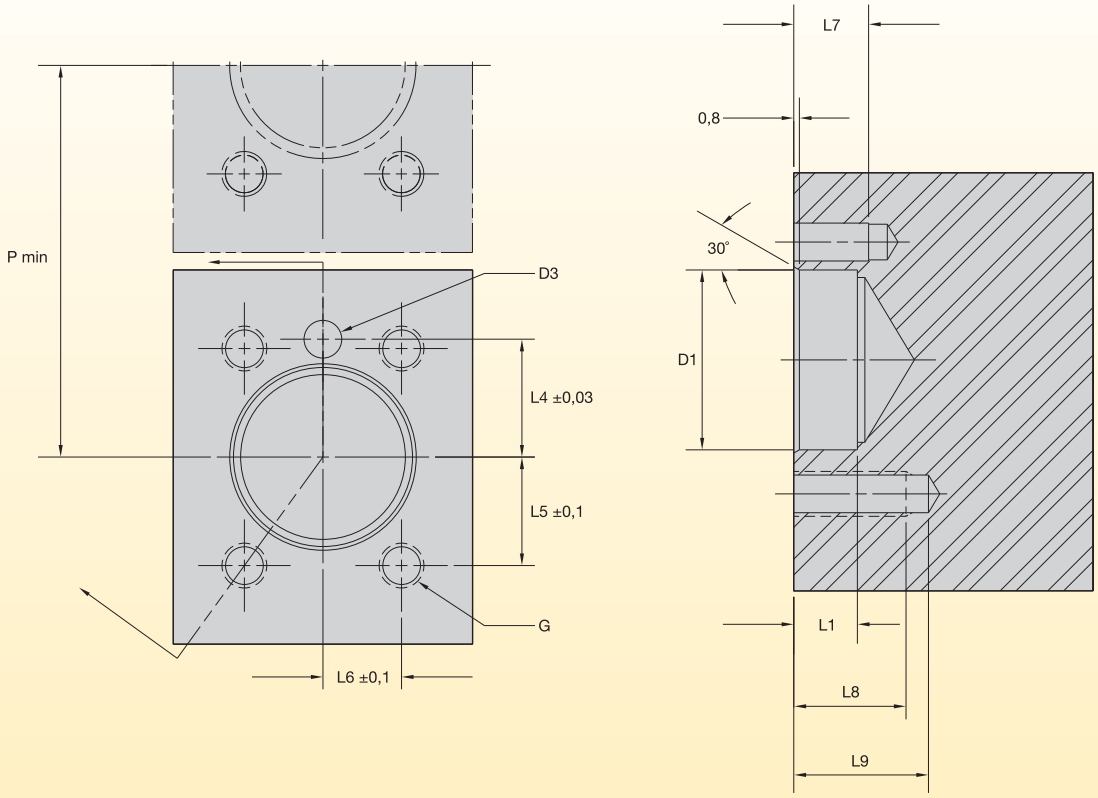

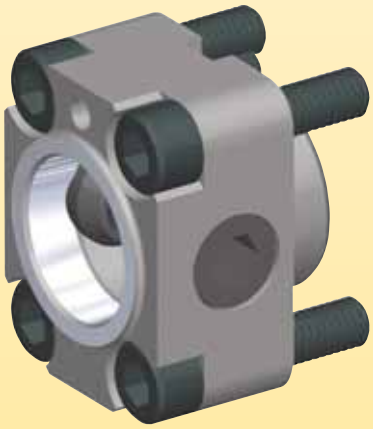

KM size	D1	D3	G	L1	L4	L5	L6	L7	L8	L9	P
KM12	10,025/ 10,050	4,064/ 4,077	M3	5,0	8,25	8,00	5,13	6	8	10,0	22
KM16	14,025/ 14,050	5,055 5,075	M4	6,5	10,75	10,25	6,00	10	12	15,0	28
KM20	18,025/ 18,050	5,055/ 5,075	M5	8,0	13,00	12,25	7,75	10	12	15,0	34
KM25	24,025/ 24,050	5,055/ 5,075	M6	8,5	15,75	14,50	10,50	10	15	18,0	40

KM Micro/KM Mini NCM-SF with Coolant

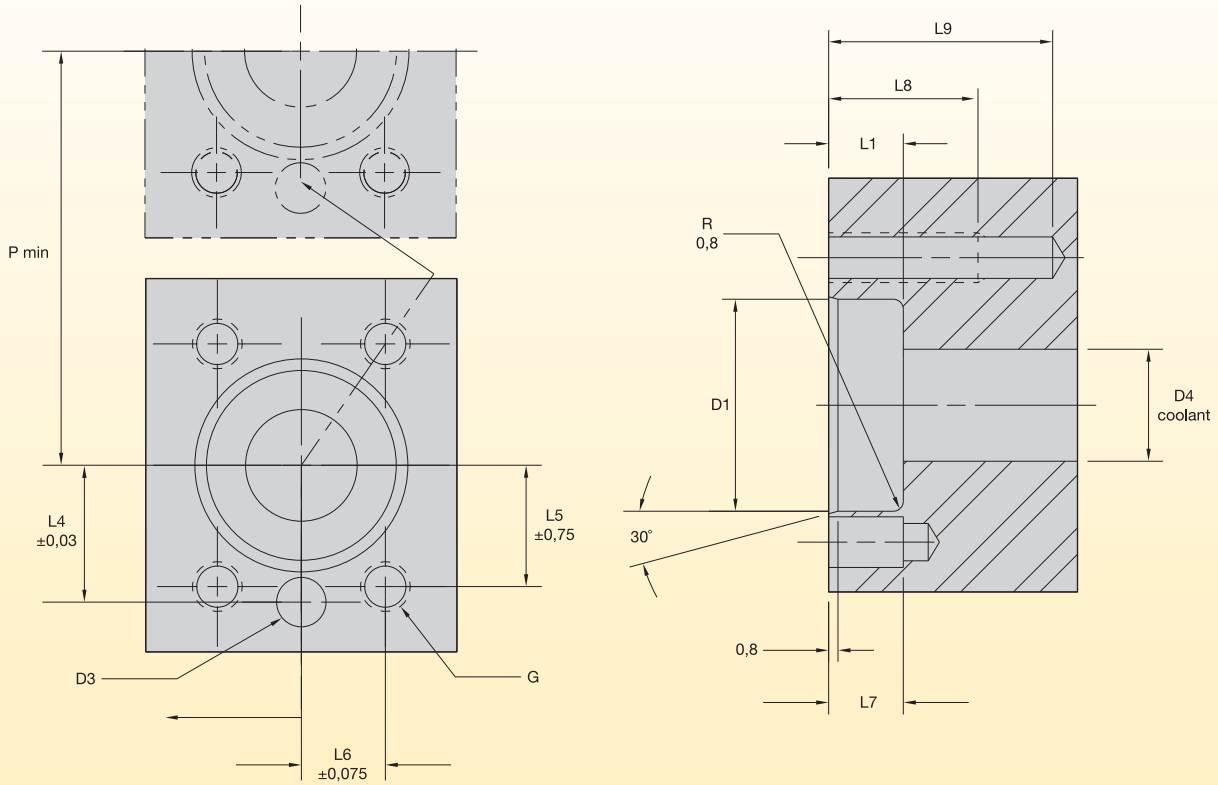

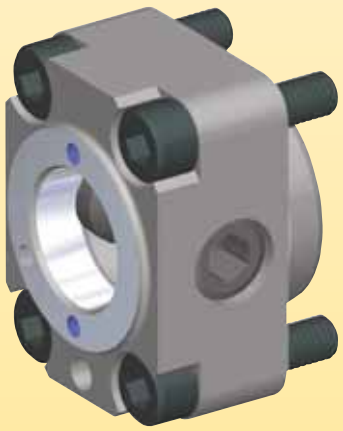

KM size	D1	D3	D4	G	L1	L4	L5	L6	L7	L8	L9	P
KM1612	17,025/ 17,050	4,060/ 4,080	6 - 12	M4	6	11,00	9,75	6,75	6	12	18	27,5
KM2016	20,025/ 20,050	5,055/ 5,075	6 - 16	M5	8	13,25	12,00	8,00	7	13	18	34,0
KM2520	26,025/ 26,050	5,055/ 5,075	6 - 22	24.5	8	16,15	14,50	10,00	10	12	18	39,0

KM Mini NCM-SF with Coolant

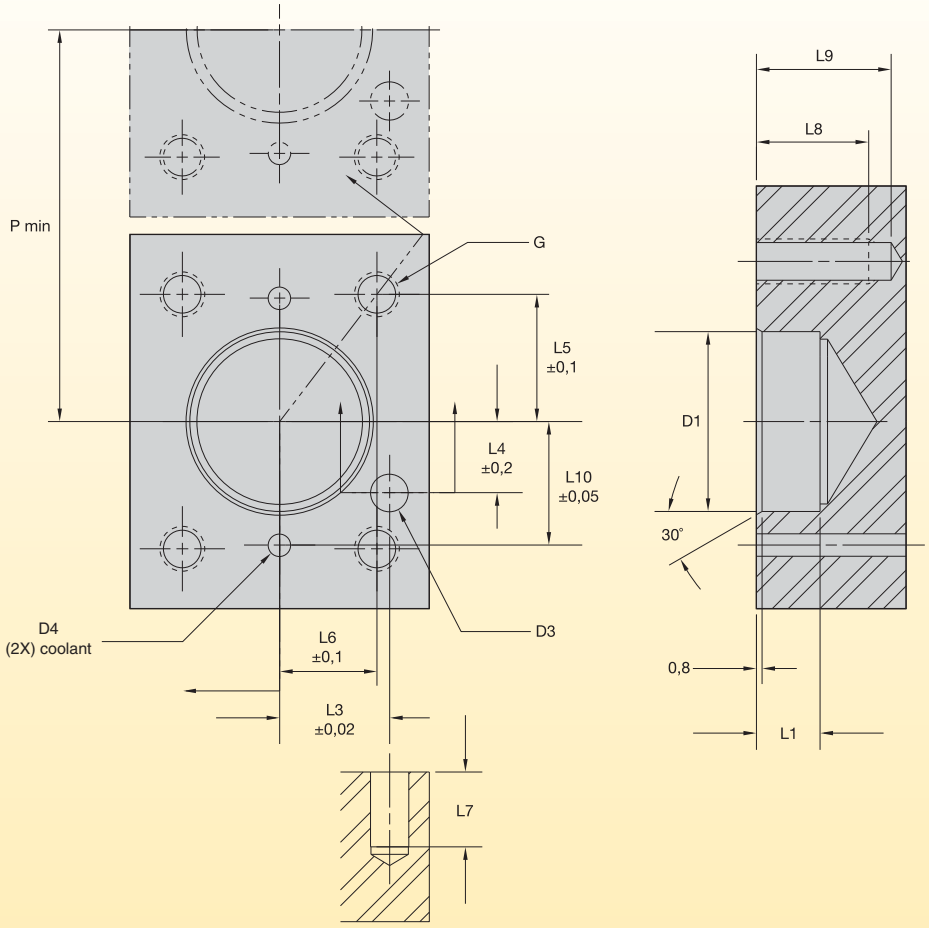

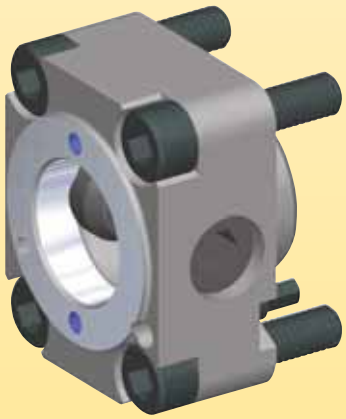

KM size	D1	D3	D4	G	L1	L3	L4	L5	L6	L7	L8	L9	L10	P
KM3225	24,025/ 24,050	5,106/ 5,126	3	M6	8,5	14,7	9,5	17	13	10	15	18	16,5	45

KM Micro™ Quick Change Tooling System

A smaller, more compact version of the internationally renowned KM™ system.

- Quick-change cutter heads reduce indexing and set-up times by 66%.
- Specially designed for use with automatic and smaller universal lathes.
- Unique flange attachment system increases machine tool capacity.
- KM Micro square shank adapters can be installed quickly and easily in existing tool block adapters.

Experience the advantages at your Authorized Kennametal Distributor or at **www.kennametal.com**.

www.kennametal.com

KENNAMETAL®

Balancing

Kennametal offers a range of balanced and balanced-by-design toolholders capable of extending spindle and tool life and improving part quality at higher machining speeds.

Definitions for Balance

Standard Toolholder

A toolholder that may contain uncorrected features (unbalanced drive slots, notches, locking screws, etc.). Standard toolholders have no compensating features added to correct balance, used in basic, low-speed applications.

Balanceable

A toolholder with a built-in mechanism that can adjust to correct any unbalance inaccuracies incurred during normal manufacturing. The fully assembled tool (toolholder and cutting tool) can be balanced as a system using a balancing device.

Balanced-by-Design

A toolholder designed with compensating features to correct any unbalance caused by uneven drive slots, notches, locking screws, etc. The balanced toolholder is capable of being used in high-speed applications. Small, residual unbalance may result due to normal manufacturing tolerances within the shank standards.

Balanced

A toolholder has been balanced to predetermined specification after manufacture by checking the balance condition with a balancing device. This may be followed by physically removing material from the toolholder, such as holes and/or slots.

When machining at higher speeds, responsible machining practices must be observed. Unbalance is caused by uneven mass distribution in the tool or toolholder. Potential sources of unbalance are movable parts (adjustable cartridges, set screws, spindle spring pack, and clamping mechanisms), manufacturing tolerances, and design.

Forces caused by unbalance increase with the rotational speed squared. Excessive unbalance can cause premature wear to the tool and spindle bearing, which can adversely affect surface finish and accuracy.

(continued)

Balancing *(continued)*

The balance quality is usually specified by the balance grade G, according to ISO 1940-1 and ANSI S2.19 standards.

The balance quality grade (G) was derived from practical experience, which is expressed in millimeters per second (mm/s) and ranges from 0,16–4000. For rotating tooling and general machinery parts, it is usually specified to be G 2.5 or G 6.3. A lower number designates better balance quality.

The permissible residual unbalance can be calculated by the following equation:

$$U_{per} = \frac{9549 \times G \times M}{n}$$

Where:

U_{per} =	permissible unbalance, expressed in gram millimeters (gmm)
G =	desired balance grade
M =	rotor mass in kilograms (kg)
n =	operating speed in rotations per minute (RPM)

Example:

Rotor mass =	2 kg
n =	10,000 RPM
Desired balancing grade =	G 6.3

$$U_{per} = \frac{9549 \times 6.3 \times 2}{10{,}000} = 12 \text{ gmm}$$

The same value can be obtained from the chart on the following page. It gives the permissible specific unbalance in gram millimeters (gmm) as a function of the rotational speed and the balance quality (G). For the example above, at 10,000 RPM and for grade G 6.3, the maximum residual unbalance would be 6 gmm/kg. The toolholder assembly (including the tool) has a mass equal to 2 kg, the permissible unbalance is [(6 gmm/kg) x 2 kg], which equals 12 gmm.

(continued)

Balancing *(continued)*

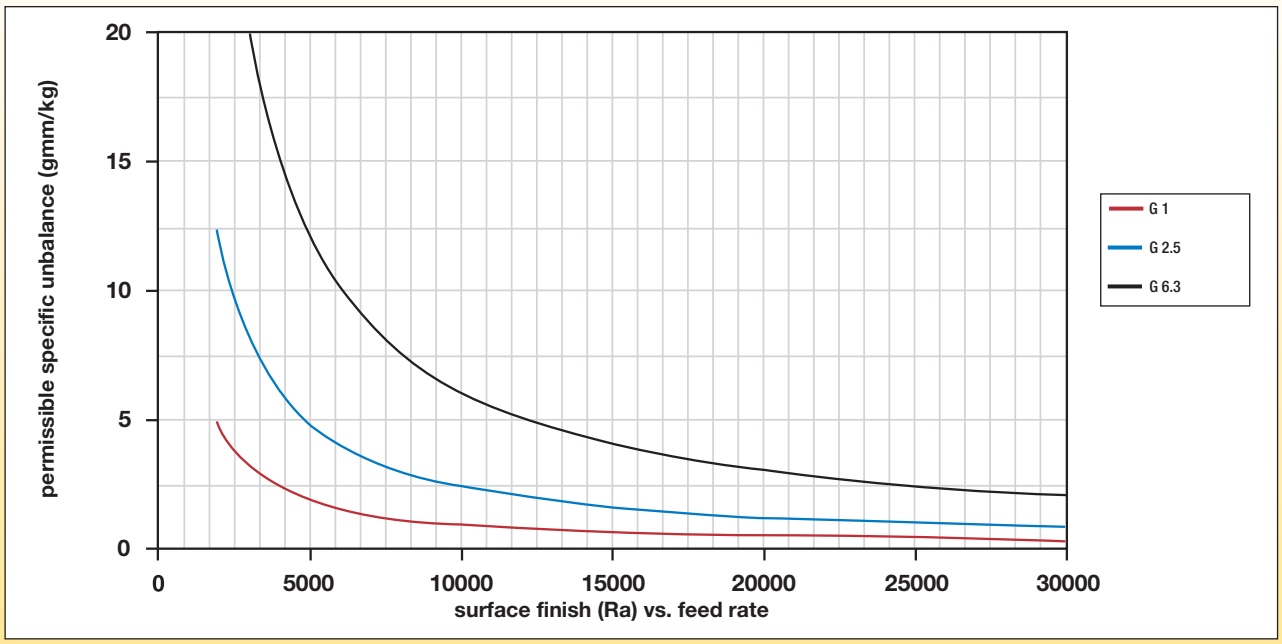

From the approach described in ISO 1940-1, the requirements for maximum residual unbalance become very strict as speed increases. For example, a G 2.5 balancing grade can become unpractical at 25,000 RPM for a tool with a mass of 1 kg. The chart shows that the maximum residual unbalance would be 1 gmm, which could be very time consuming to be achieved or even beyond the accuracy of the balancing machine.

Comparing the cutting forces can provide a reference for the balancing requirements. Generally, finishing operations generate lower cutting forces and require a better balance quality. Though rotating components should always be balanced, in most cases it is sufficient to keep the unbalance forces to 5–10% of the cutting forces.

(continued)

Balancing *(continued)*

The permissible residual unbalance can be calculated by the following equation:

$$F = U \times (n/9{,}549)^2 \quad \text{(Newtons)}$$

Where:

U = unbalance in gram millimeters (gmm)

N = rotational speed (RPM)

In this particular case, the unbalanced induced force would be F = 1 x (25,000/9,549)2 = 6,9 N. The cutting forces generated are likely to be orders of magnitude greater than that.

Good balancing quality does not necessarily guarantee safe operation at higher speeds. Other variables (spindle connection, type of operation, cutting parameters, machine stiffness, bearing condition, etc.) should always be considered.

Unbalance can be corrected by material removal (drilling, milling, grinding), material addition (set screws), and material redistribution (balancing rings or set screws).

For a given unbalance, the following formula can be used to determine the hole depth (L) necessary to correct for the unbalance*:

* Formula for steel components only.

$$L = \frac{D - \sqrt{D^2 - U \times 1300/d^2}}{2}$$

Where:

U = unbalance (gmm)

D = diameter of placement (mm)

d = hole diameter (flat bottom) (mm)

L = hole depth (mm)

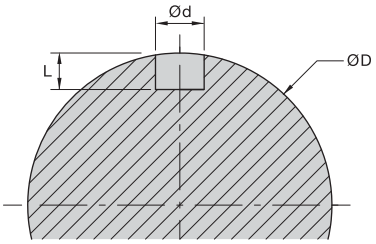

Shrink Fit

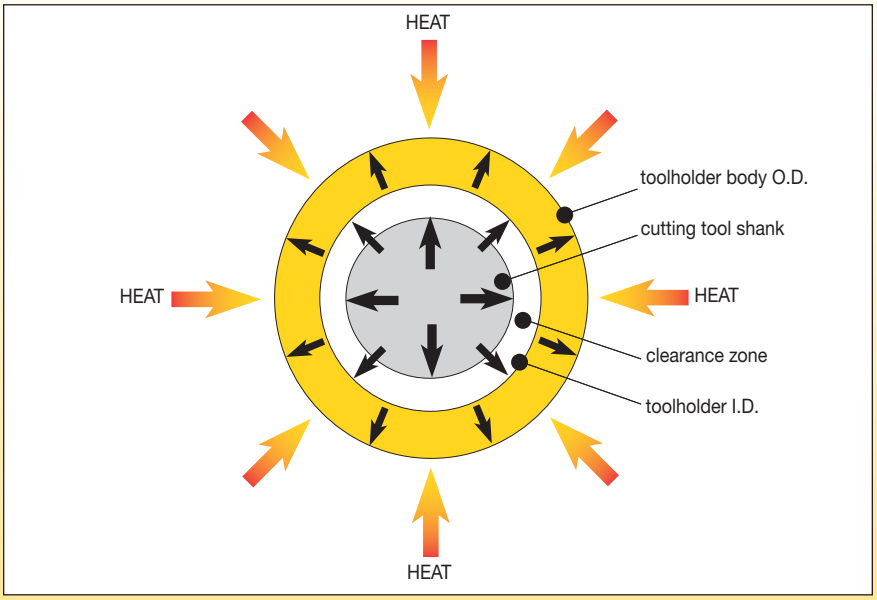

The Concept

Heat shrinking is not a new process in the machine tool industry. However, the concept was only recently implemented as a quick-change toolholding mechanism for clamping cylindrical cutting tools for high-speed machining applications.

The Shrink Fit process begins by applying a quick and precise heat to the holding end of a toolholder. This causes the internal bore, which is slightly smaller than the shank of a cutting tool, to expand, allowing a tool to be inserted. As the toolholder cools, the bore shrinks to create 360° of uniform pressure along the entire length of the bore, resulting in an evenly distributed clamping force that mechanical toolholding cannot beat.

Due to the design, flatted-style, Weldon®, and Whistle Notch™ cutting tool shanks can employ Shrink Fit technology. To gain full benefits of the technology, fully cylindrical tool shanks are recommended. As long as the heating processes are kept within the elastic range of the toolholder material, this clamping operation can be repeated for several thousand cycles.

Shrink Fit Tooling Advantages:

- Low runout — cutting tools are gripped 360° along the entire length of the cutting tool shank for an evenly distributed clamping force.
- Clamping forces are greater than collets or hydraulic chucks.
- During testing, tool material properties break down and shear before slippage occurs.
- Slim and short toolholder profile designs are achievable because no moving parts are used.
- Well suited for high-speed operations because their symmetry provides the best possible balance.
- Sealing stop screws are not required — designed interference between the cutting tool and toolholder forms a seal that enables coolant to flow only through designated passages.

These advantages enable Shrink Fit technology to work at greater speeds and feeds, produce better finishes, deliver increased tool and spindle life, and generate more productivity.

Heat-Activating Systems

Shorter cycle time, less cooling downtime, localized heating, and integrated cooling systems are essential for a safe and simple heating system. Shrink Fit heating systems include induction, hot-air, and open-flame methods, with induction being the easiest and fastest of these systems.

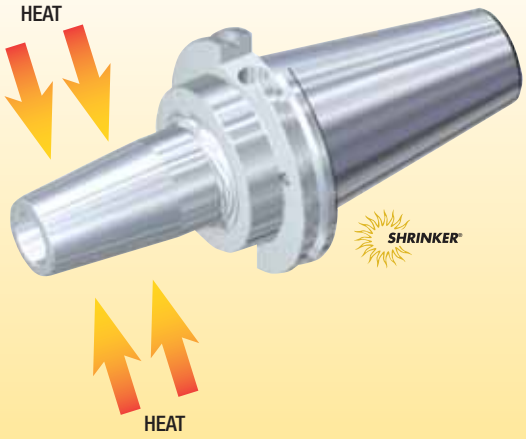

Toolholders

- Slim design.
- Balanced.
- Flatted-style, Weldon®, and Whistle Notch™ shanks can be gripped. Optimal results are obtained with smooth, cylindrical shank cutting tools — without flats and/or notches.
- Avoid using carbide tools with polished shanks. This will reduce torque values by 60%.

HT (High Torque) Shrink Fit Toolholders

HT Shrink Fit holders have a high interference level that offers 30–50% greater torque than competitive systems. This line is only to be used with carbide tools because of their low thermal expansion coefficient. These toolholders require a machine with at least 10 kW of power to apply heat quick enough to avoid heating the tool.

GP (General Purpose) Shrink Fit Toolholders

GP toolholders enable the use of all materials and extensions because they have lower interference levels. Operators should use this style if not generating high cutting forces.

Ideal Surface Quality

- Metric (ISO standard) Ra ≥0,8 µm surface finish.
- Inch (industry standard) Ra ≥32 µin surface finish.

(continued)

Shrink Fit *(continued)*

Straight shank toolholder extensions are a great complement to the Shrink Fit system. Use caution and do not overheat Slim Line products. Overheating can cause warping or other permanent damage. Toolholder life drastically reduces if activating heat is not properly controlled.

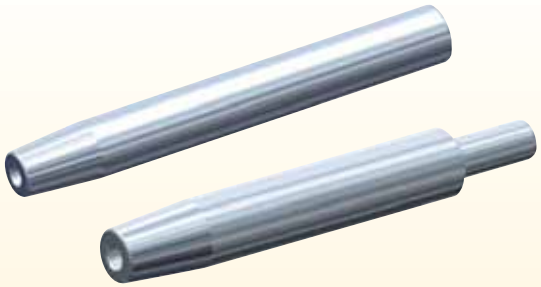

Cutting Tool Requirements

metric (ISO standard)

cutting tool shank diameters			tolerance	
3mm	2,997	3,000	h4	0.000/-0.003
4mm	3,996	4,000		0.000/-0.004
5mm	4,995	5,000	h5	0.000/-0.005
6mm	5,992	6,000	h6	0.000/-0.008
8mm	7,991	8,000		0.000/-0.009
10mm	9,991	10,000		0.000/-0.009
12mm	11,989	12,000		0.000/-0.011
14mm	13,989	14,000		0.000/-0.011
16mm	15,989	16,000		0.000/-0.011
18mm	17,989	18,000		0.000/-0.011
20mm	19,987	20,000		0.000/-0.013
25mm	24,987	25,000		0.000/-0.013
32mm	31,984	32,000		0.000/-0.016
40mm	39,984	40,000		0.000/-0.016
50mm	49,984	50,000		0.000/-0.003

inch (industry standard)

cutting tool shank diameters			tolerance
1/8	.1249	.1247	-0.0001/-0.0003
3/16	.1874	.1872	-0.0001/-0.0003
1/4	.2499	.2496	-0.0001/-0.0004
5/16	.3124	.3121	-0.0001/-0.0004
3/8	.3749	.3746	-0.0001/-0.0004
7/16	.4375	.4371	0.0000/-0.0004
1/2	.5000	.4996	0.0000/-0.0004
9/16	.5625	.5621	0.0000/-0.0004
5/8	.6250	.6246	0.0000/-0.0004
11/16	.6875	.6871	0.0000/-0.0004
3/4	.7500	.7495	0.0000/-0.0005
7/8	.8750	.8745	0.0000/-0.0005
1	1.0000	.9995	0.0000/-0.0005
1-1/4	1.2500	1.2495	0.0000/-0.0005
1-1/2	1.5000	1.4995	0.0000/-0.0005
2	2.0000	1.9995	0.0000/-0.0005

Axial Adjustment Gages

Cutting tool length adjustment is performed using a special axial adjusting gage (b) before shrinking the cutting tool into the toolholder. This gage **(b)** is placed on the toolholder **(a)** along with the cutting tool **(c)**. The length difference of the setting gage **(l2)** is calculated into the required tool assembly length. The whole assembly can then be placed into a length presetter for adjustment. Rotating the gage moves the axial stop screw and presets the assembled tool to the required length. After removing the gage, the cutting tool can then be shrunk into the toolholder.

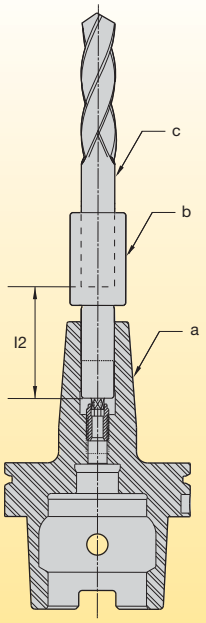

SAFE-LOCK™

SAFE-LOCK™ is a pull-out protection system for high-performance machining, in particular for heavy-duty cutting. This is achieved by helical grooves that are ground into the tool shank. These, together with the respective pin drivers in a shrink fit holder, prevent the tool from being pulled out, even during extreme machining conditions.

By locking the cutting tool in the holder, this pull-out security ensures optimum process reliability in conjuction with shrink fit runout accuracies and rigidity for longer tool life and maintains higher productivity and part accuracies for our customers.

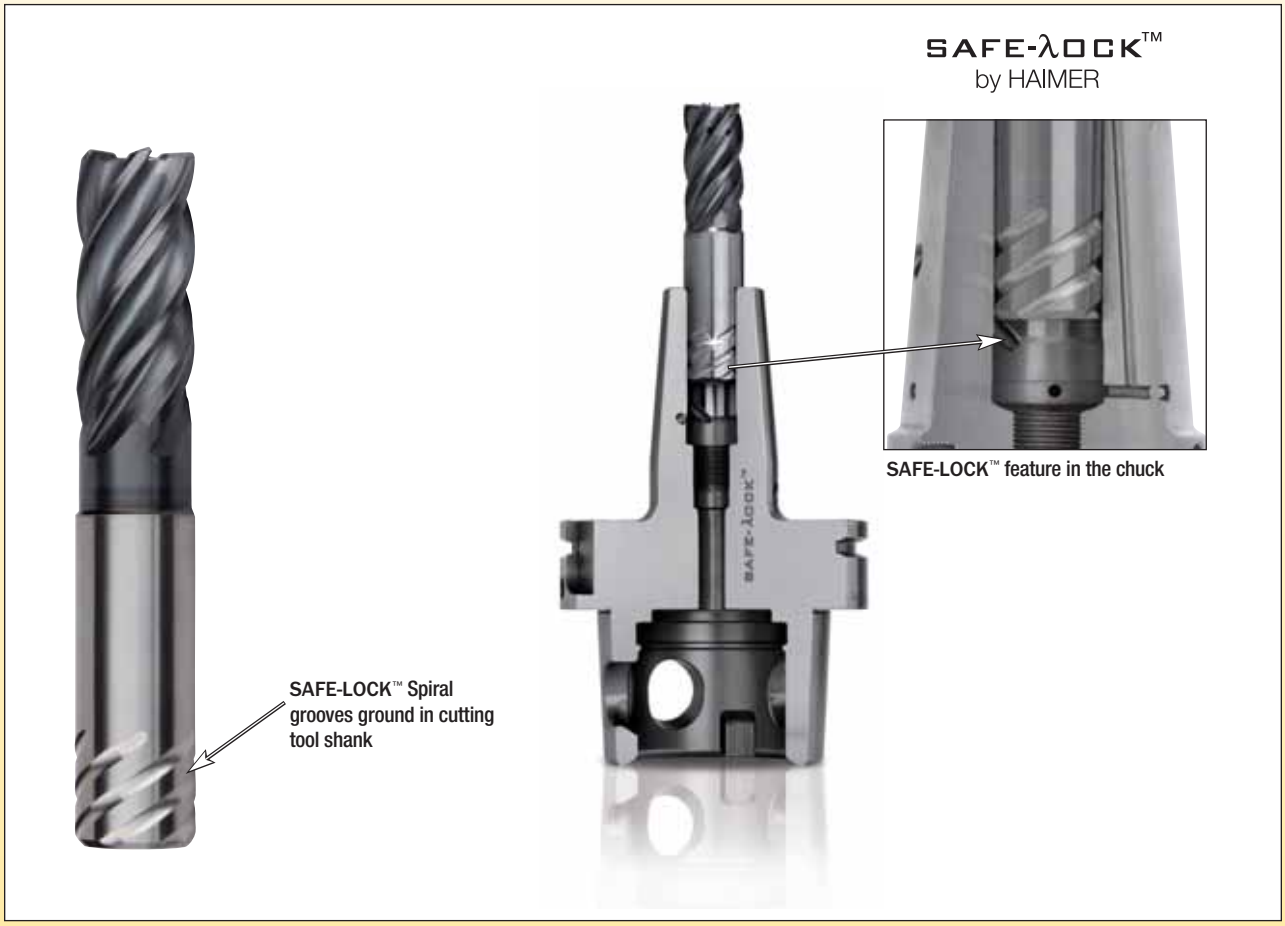

High-Performance Milling Chucks

- Heavy- and fine-milling capabilities.
- Prebalanced G6.3 @ 20,000 RPM — six threaded M6 holes to accept set screws for fine balancing.
- Heavy milling — tighten locknut until O-ring on back face of locknut just touches the flange on the chuck body to achieve runout .0004" 3 x D1.
- Fine milling — tighten as above, then back the locknut off 1/8–1/4 turn to achieve runout .0002" 3 x D1.
- Sub-zero heat treatment for material stability.
- Through-the-toolholder coolant capability using stop screw as sealing device.
- 3/8" axial adjustment stop screw.

Experience the advantages at your Authorized Kennametal Distributor or at **www.kennametal.com**.

www.kennametal.com

KENNAMETAL®

Standard Styles

Kennametal hydraulic chucks provide optimum performance for clamping full-cylindrical straight shanks, such as solid carbide drills and end mills. Activation of the chuck is achieved by turning the piston screw, which pressurizes the hydraulic fluid and exerts force on a thin-walled membrane along the length of the clamping bore. This highly concentric clamping force not only holds the tool shank more securely, but also produces a dampening effect that reduces vibration and helps eliminate microcracking on cutting edges.

A safety stop prevents chuck damage caused by over-tightening either with or without the cutting tool in place. Another unique feature is the special spiral wiper groove in the chuck's clamping bore that securely grips oily tool shanks. All Kennametal hydraulic chucks utilize a range of sealed, cutting-tool-reducing sleeves to maximize chuck versatility. Reducing sleeves can also be used for converting bores from inch to metric and vice versa.

Slim Line

Slim Line hydraulic chucks have a sophisticated shape for universal application and maximum precision. After the chucking process, safety is guaranteed if a minimum clamping force or a transmittable torque (determined according to the clamping diameter) is reached. This is achieved through the clamping screw operation and the stroke of the clamping piston that force the hydraulic oil into the thin-walled expansion chamber with high pressure.

Standard/HP Line

Our proven Standard Line hydraulic chucks have an external adjustment screw for radial alteration up to 3/8" of the cutting-tool length. This feature eliminates the need to remove the cutting tool or retention knob to make fine adjustments. Standard Line chucks are prebalanced and can also be used with SEFAS™ chamfering rings. Please see the toolholder sections of this catalog for information regarding balancing quality.

Trend Line

New Trend Line hydraulic chucks offer maximum precision at an attractive price. This system provides the same accuracy specifications as the Standard Line except with an axial back-up screw through the chuck bore to achieve the 3/8" radial adjustment of the cutting tool length. SEFAS chamfering rings also can be used with our Trend Line chucks.

Basic Line

Basic Line hydraulic chucks have a high-quality runout specification of .0001. These chucks are balanced-by-design for speeds up to 10,000 RPM. Like the Trend Line, Basic Line chucks utilize an axial back-up screw through the chuck bore to achieve a 3/8" radial adjustment. Larger body diameters give this chuck a higher torque transmission (grip) of 220 ft. lbs. Please note that the standard SEFAS chamfering ring cannot be used in this chuck design.

*To learn more, **scan here**.*
For instructions on how to scan, please see page xxxiii.

General Design

Function

Tightening the piston clamping screw exerts force on the pressure piston, which presses the hydraulic fluid, exerting force on the thin-walled expansion sleeve. This pressure causes the sleeve to compress around the tool shank, creating a highly concentric clamping force.

Effect

The hydraulic clamping system has a dampening effect. Vibration in a mechanical clamping system can cause microcracking on insert cutting edges. This is prevented by the hydraulic expansion chuck and results in higher production quality and up to 4x better tool life.

Accuracy

The accuracy shown is based on a round shank (no flats) with h6 tolerance and no reducing sleeve.

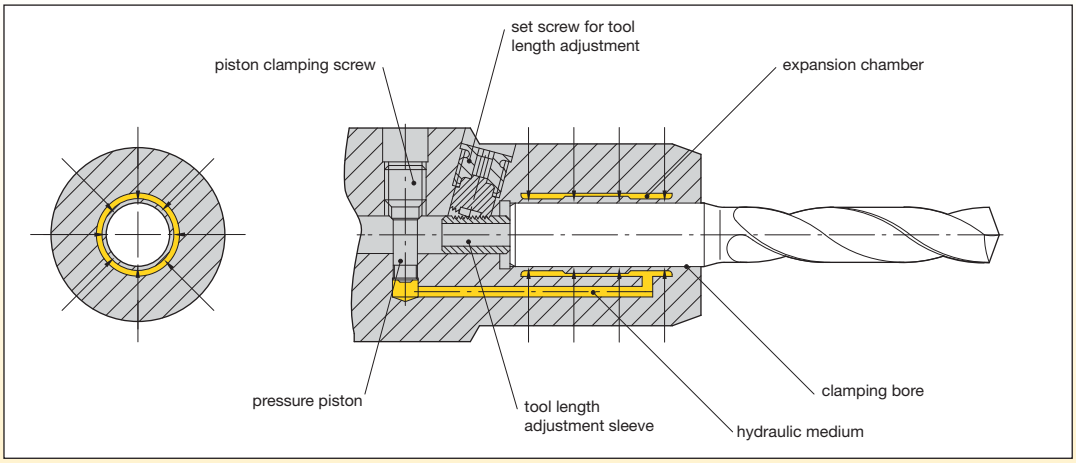

Features

- Turning the external set screw adjusts axial tool length. There is no need to remove the cutting tool or coolant supply unit for standard designs.
- Maintained contact with the tool-length adjusting sleeve ensures that the tool is safely held. 10mm of adjustment is provided.
- A sealed bore and a large hole through the tool-length adjusting screw enable maximum coolant to flow through coolant-fed cutting tools.
- A uniquely designed piston clamping screw prevents damage from overtightening and accidentally actuating the hydraulic mechanism without a tool in the chuck.
- High-performance balanced chucks can be converted to balanceable chucks by adding a set of Kennametal balance rings that compensate for cutter imbalance and optimize performance.
- Wiper grooves inside the bore safely grip oily shanks, sealing the bore to eliminate contamination from chips, dirt, or coolant.
- SEFAS™ chamfering rings can be added to chucks, reducing the need for step drills and secondary chamfering operations.
- A wide assortment of reducer sleeves are available to increase the application range of hydraulic chucks. When using a bushing, the runout could be up to twice as high as the example shown.

(continued)

General Design *(continued)*

≤3µm

Application

Hydraulic expansion chucks work best when clamping these style shanks:

- Shanks to DIN-6535 — forms HA, HB, and HE.
- Shanks to DIN-1835 — forms A and B (with shank tolerance h6 and Ra minimum of 0,3 µm).
- Forms HA and A — plain cylindrical shank, 6–32mm diameter.
- Forms HB and B — Whistle Notch™ shank, 6–20mm maximum diameter.
- Form HE — Whistle Notch shank, 6–20mm maximum diameter. (Kennametal suggests the use of a reducer collet).
- Inch straight shanks:
  - 1/4–5/8" (.0004 under nominal diameter maximum).
  - 3/4–1-1/4" (.0005 under nominal diameter maximum).

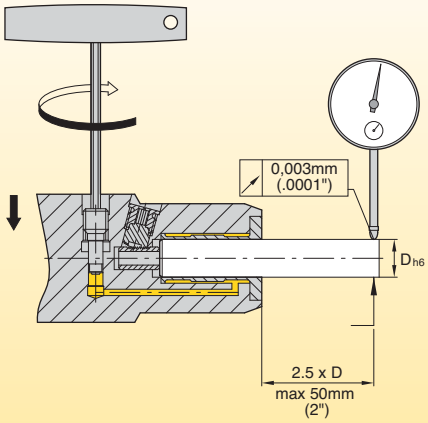

Slim Line Design

≤6µm

Weldon® shanks with a maximum diameter of 20mm (3/4") can be gripped without reducer collets. However, Kennametal recommends using reducer collets for all flatted shanks. Highest accuracy is obtained with plain, cylindrical shanks.

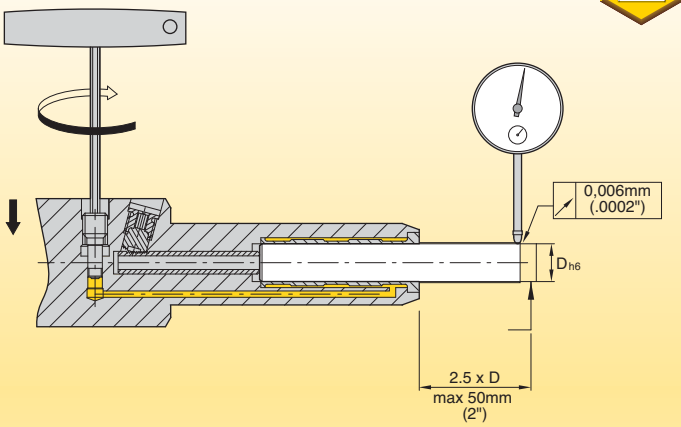

Using a sleeve gives higher grip torque:

Formula: $\frac{\text{sleeve bore}}{\text{chuck bore}}$ x chuck torque = assembled torque

Example: $\frac{\text{12mm (sleeve bore)}}{\text{20mm (chuck bore)}}$ x 220 Nm = 132 Nm

While chart shows for a 12mm Hydraulic Chuck = 70 Nm approx.
2x grip advantage

Setting Up New Hydraulic Chucks

Length adjustment for:
Standard/HP Line and Slim/Standard Line

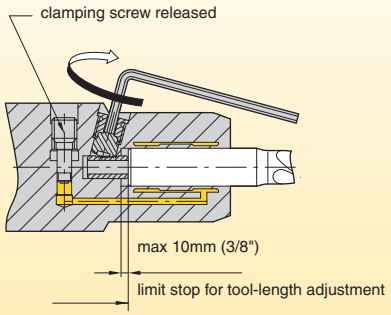

Length adjustment for:
Trend Line, Basic Line, and Slim/Trend Line

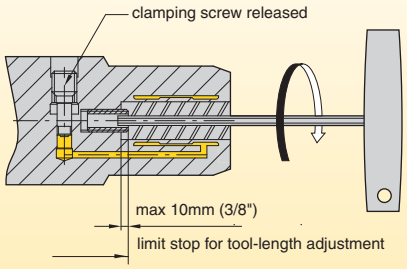

1. Remove all grease from the hydraulic chuck before using.
2. Insert the cutting tool into the clamping bore as far as the stop pin/stop screw will allow.
3. Adjust the cutting tool length with a hex wrench.
4. Always tighten the clamping screw with a hex wrench as far as the limit stop by hand tightening. Never try to adjust the stop pin when the hydraulic chuck is in the clamped position.
5. The tool is now clamped and ready for use.

Maintenance

Kennametal hydraulic chucks are maintenance-free and deliver long service life. It is important that the clamping function be checked with a test pin on a regular basis. Any dirt in the bore can be removed with a nylon cleaning brush.

- The clamping function can be tested quickly and easily using the test pin.
- Insert the test pin into the clamping bore as far as the stop pin/stop screw allow.
- Tighten the clamping screw with a hex wrench as far as the limit stop by hand tightening.
- The chuck is functioning correctly if the test pin cannot be moved by normal hand pressure.

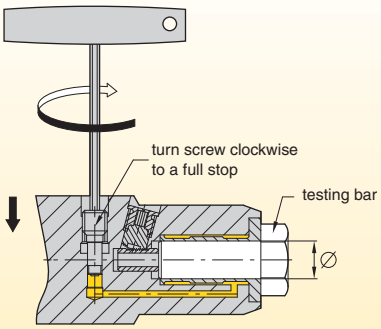

Reducing sleeves are available; see page J4.

Cleaning brushes are available; see page L15.

Test pins are available; see page L14.

IMPORTANT
Never tamper with the oil-loading orifice (sealed with a cap) as this could destroy the clamping ability of the hydraulic chuck and require it to be sent to Kennametal for service.

In the event of small tool crashes or misuse of the chuck, please contact your local Kennametal Service and Repair Department to have your Kennametal hydraulic chuck serviced or repaired by qualified Kennametal service technicians.

The HPMC (High-Performance Milling Chuck) System

Application

The HPMC System is ideal for holding round shank cutting tools and extensions on various applications because it offers greater versatility. This makes it an excellent choice for end mills, reamers, indexable cutters, drills, straight shank extensions, and boring systems. The HPMC System, with its powerful gripping torque, provides the maximum performance for tough roughing and high metal removal applications, as well as delivering first-rate accuracy for finishing applications — all with the same chuck.

These toolholders are through-coolant capable with the use of supplied backup screws. Threaded holes in the chucks accept set screws for fine balancing, and reducing sleeves allow the same holder to be converted for smaller gripping sizes.

Design

The HPMC System is comprised of an inner chuck body, a needle roller bearing assembly, and a thick-walled outer locknut. The inner chuck body, with radial and axial grooves at the inside bore, acts as a master collet by compressing around the cutting tool, exerting a very strong grip. The chuck bore is compressed by roller bearings as they track up a taper of approximately 4°. The roller bearings are held in a retainer (four per window to maximize contact) at an angle slightly skewed from that of the chuck taper angle. The locknut bearing retainer's wall thickness is greater than that of the chuck body nose. Therefore, as the locknut is rotated clockwise, the roller bearings track in a helical movement, gradually climbing the shallow taper.

There are no threads in the HPMC System. As the two tapers are forced together, a tremendously high, uniform force is created. This squeezes the chuck body inward, conforming it to the cutting tool shank. Radial grooves assist the internal diameter by evenly collapsing inward, which improves gripping torque, accuracy, and prevents fretting. Force continues to be applied until the locknut's back face bottoms out on the chuck's body face. This is the maximum gripping torque position. Oil residue left on cutting tool shanks can cause slippage, but axial grooves minimize this by draining contaminants.

Shallow contact angles produce a self-locking effect, so the chuck will not release during operation. Because of this strong grip, no torque wrench is required. Also, the high gripping force of the HPMC enhances its ability to transmit energy to the machine tool, so vibration, deflection, and runout are minimized. The cutting tool shank offers an advantage over collet chucks because there is no axial drawback as the locknut is tightened.

A single toolholder provides 5–10% more gripping torque for heavy milling, and the same chuck is versatile enough to do finishing work, too.

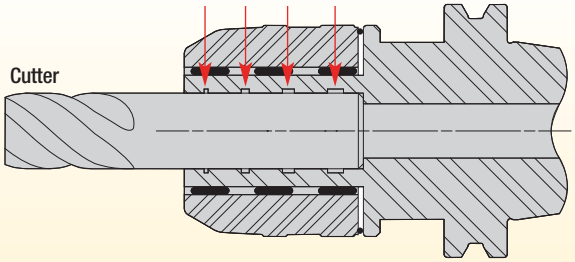

To get the maximum accuracy out of the HPMC System, tighten the locknut to the face stop and then back off half a turn. As this is done, be sure the O-ring on the back face of the locknut stays in contact with the chuck face.

Stop screws are included with all HPMC Systems for length adjustment or coolant feed. These screws are designed with a cone face and reversible flat face and an O-ring for coolant sealing options.

HPMC Systems are subjected to sub-zero treatment to stabilize the material and prevent pitting on the bearing contact surface. This helps to ensure long, worry-free tool life.

(continued)

The HPMC (High-Performance Milling Chuck) System *(continued)*

Cutting Tool Requirements

The outside diameter of the cutting tool shank and the inside diameter of the HPMC System must be wiped with a clean dry cloth before assembly. Any contamination will increase runout and reduce gripping force.

Carefully monitor the cutting tools used in these chucks so they do not exceed h6 (nominal to -.0005") on the shank diameter. Use tools as close to nominal as possible. Cutting tool shank roundness should be within 0,003mm (.0001"). Undersized tools cause excessive stress and may cause chuck failure.

Optimal chuck performance is attained when the cutting tool shank is round, without flats. Cutting tools with small flats may be held, but they will increase runout. Whistle and flatted cutting tool shanks are recommended in conjunction with reducing sleeves. For best performance, keep shank flats to a minimum.

The minimum length of engagement is 2x the diameter of the cutting tool shank. Short holding length may cause the tool and/or chuck to break. This could dislodge the cutting tool and result in serious injury to the operator.

The milling chuck should never be tightened without a cutting tool inside the bore. High gripping forces will cause permanent deformation to the inside diameter.

Maintenance Operations

Greasing the needle bearing is the only required maintenance. Follow the procedure below to ensure maintenance is properly performed:

1. Tighten the locknut clockwise to obtain clearance from the retaining ring.
2. Remove the retaining ring from the chuck.
3. Unlock the locknut counterclockwise, and lift the nut assembly from the chuck.
4. Wipe off old grease from the milling chuck and all other components.
5. Recoat the needle bearings in the locknut liberally with a quality, water-resistant grease.
6. Regrease the outside diameter of the milling chuck where the locknut is housed.
7. Reinstall the locknut on the milling chuck body and tighten to gain clearance for reinserting the retaining ring.
8. Tighten and loosen the locknut several times. Recheck the retaining ring for correct fitting.
9. Wipe away any excess grease.

Please contact the Kennametal Service and Repair Department to have your Kennametal products serviced or repaired by qualified Kennametal service technicians.

Setting the Accuracy of the Milling Chuck

Heavy Milling

- Tighten the locknut all the way down with a milling chuck wrench until the O-ring on the locknut just touches the flange of the milling chuck body (O-ring should not be compressed).
- Accuracy 10–20 µm (.0004–.0008") at 3x diameter up to 50mm (2").

Finish Cut

- Back the locknut off 1/8–1/4 of a turn from above position.
- Best accuracy — 5 µm (.0002") at 3x diameter up to 50mm (2").

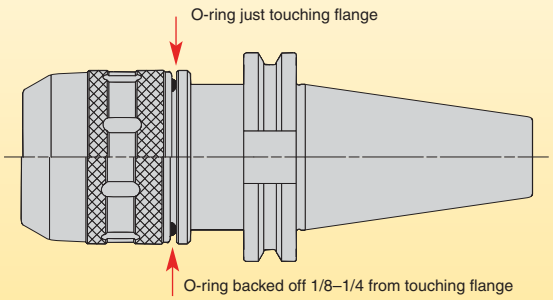

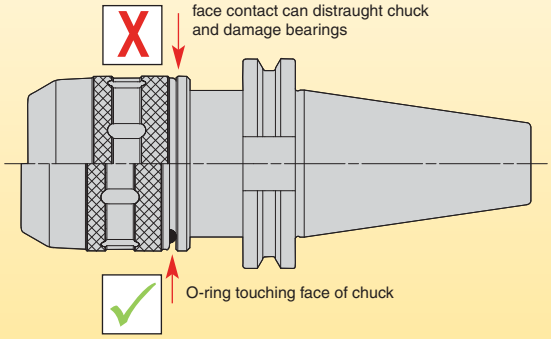

CAUTION
DO NOT over tighten the milling chuck without a tool shank inserted. This may cause serious damage to the milling chuck or loss of performance.

Tunable Tooling System (TTS)

Overview

When machining with extended length setups, undesirable regenerative vibrations (chatter) can arise, causing poor surface finish, dimensional control issues, and tool breakage. To avoid chatter, machine operators are generally forced to reduce cutting parameters, which decreases metal removal rates and diminishes productivity.

Cutting force fluctuates when chip thickness varies. This is caused by waves left on the workpiece from the previous pass. These waves may create chatter when the cutting tool and workpiece interact. Continued chatter can further produce variation in cutting force, leading to more vibration. If not addressed, the amplitude of vibration may eventually reach levels that cause the tool to bounce out of the workpiece or even result in catastrophic failure.

This problem can be approached in many different ways. Chatter can be avoided by drastically reducing cutting speeds to increase process damping (friction between flank face and workpiece), which dissipates energy to reduce vibrations. Another approach utilizes milling cutters that have inserts with differential spacing. This minimizes the regenerative effect by creating a disturbance on the wave pattern left on the workpiece. However, this approach provides limited success as chip loads are no longer evenly distributed over the cutting edges and may require the feed rate to be restricted. Also, because the spacing is not even, the surface quality could be negatively affected.

The problem with these solutions is that they do not allow high metal removal rates to be maintained. To uphold high rates, the dynamic stiffness of the system must be increased. Dynamic stiffness is proportional to the product of static stiffness and damping ratio. Static stiffness can be increased through using shorter setups or larger toolholder diameters. Materials with a higher modulus of elasticity can also increase static stiffness.

The Kennametal Tunable Tooling System (TTS) provides a means for maximizing the dynamic stiffness of boring bars and milling adapters by suppressing vibrations with a passive dynamic absorber. TTS is designed with an internal mass that vibrates close to the natural frequency of the most dominant vibration mode in the system. The motion of the internal mass will dissipate energy and prevent chatter. The overall result depends on a machine's dynamic characteristics* and the rigidity of the connection between tool and machine tool. Manufacturing tolerances, preload, and wear may change the dynamic response of a machine and adversely affect overall results.

*Machines from same builder and model are not dynamically identical.

While passive dampening improves the dynamic stiffness of an extended reach tool, the damping mechanism will not perform the same with every machine. Not only does the natural frequency of the tool affect its dynamic stiffness, frequencies inherent to the machine do as well. Because machine tools have their own dynamic signature, a tool that is tuned on one machine may not be tuned on another. Unlike other products on the market that are pretuned, Kennametal tunable boring bars and milling adapters are tunable. They allow users to adjust the passive damper, optimally tuning the tool for a specific machine or setup. This enables extended reach tooling to be retuned to match a machine's dynamic signature, even as it changes over time. A key benefit of Kennametal's tunable boring bars and milling adapters is that they can be optimally tuned for any given setup. While Kennametal standard tunable products come pretuned from the factory, it may be beneficial to further optimize them once installed.

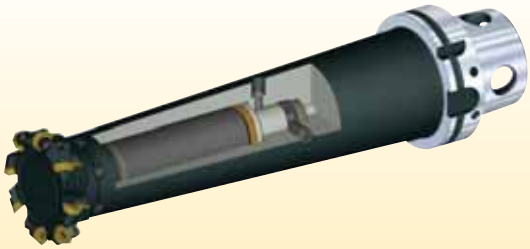

(continued)

Tunable Tooling System (TTS) *(continued)*

With the Kennametal TTS System, longer L:D ratio toolholders can be used for larger DOC, better surface finishes, and longer tool life. When TTS is applied to milling adapters, using greater insert density on milling cutters or increasing ADOC or WOC enables higher MRR. Better surface finishes and tool life can also be expected from these adjustments.

The benefits of using Kennametal's Tunable Systems go beyond increased metal removal rates. In metalcutting tests, a good correlation between dynamic stiffness and vibration levels were measured at the spindle. Vibrations can not only cause premature tool life, but also limit spindle bearing life. Preventing vibration from propagating through the machine promotes longer life for spindle-related components and maintains machine accuracy over time.

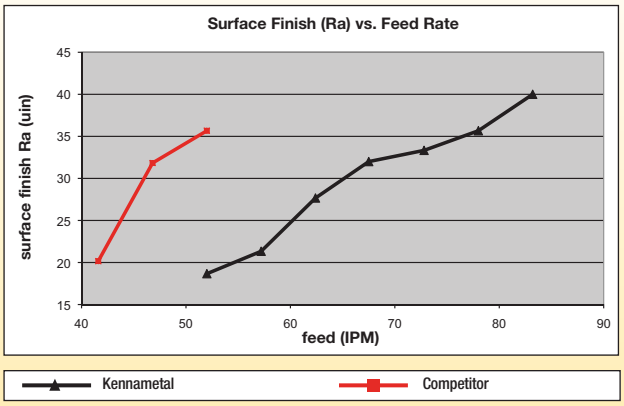

Surface finish measurements comparing a pretuned milling adapter from a competitor and a Kennametal's optimally tuned adapter on the spindle. An increase of up to 50% in feed rate for similar surface finish values can be noticed.

Dynamic Stiffness

Figure 1 shows the relative dynamic stiffness of a tunable boring bar as a function of adjusting screw tightness — loose to tightened (left to right).

The chart shows that for the given bar, optimal tuning occurs at about 70% or when the relative performance equals 1.

It is also important to note that performance decreases more severely when the tool is over-tuned, compared to when it is under-tuned. For this reason, it is best to slightly under-tune the system.

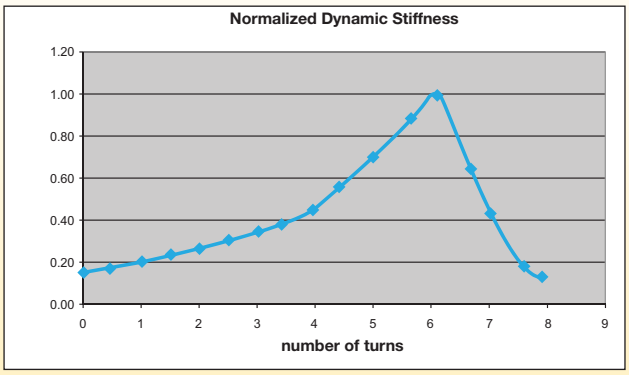

Fig. 1

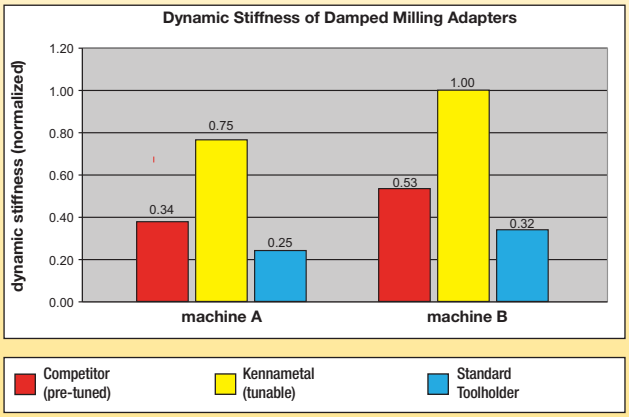

Tunable Milling Adapters

The Kennametal Tuned Tooling System offers a full line of tunable milling adapters capable of performing at maximum output without the hindrance of vibration. Tunable milling adapters are through-coolant capable, and, because the internal damper can be adjusted to alleviate chatter, they provide optimum surface finish and longer tool life.

General Guidelines for Milling with Extended Reach Adapters

1. Loosen both clamping screws.
2. Turn the adjusting screw in the positive direction until it becomes snug. The adjusting screw becomes snug when it locks the tuner mass.
3. Turn the screw one complete turn in the negative direction and take a test cut.
4. Repeat Step 3 until good surface finish is achieved. You may need to use small increments to find an optimal position.
5. Back the adjusting screw off a 1/4–1/2 turn in the negative direction.
6. Tighten both clamping screws and take a test cut to confirm desired results.

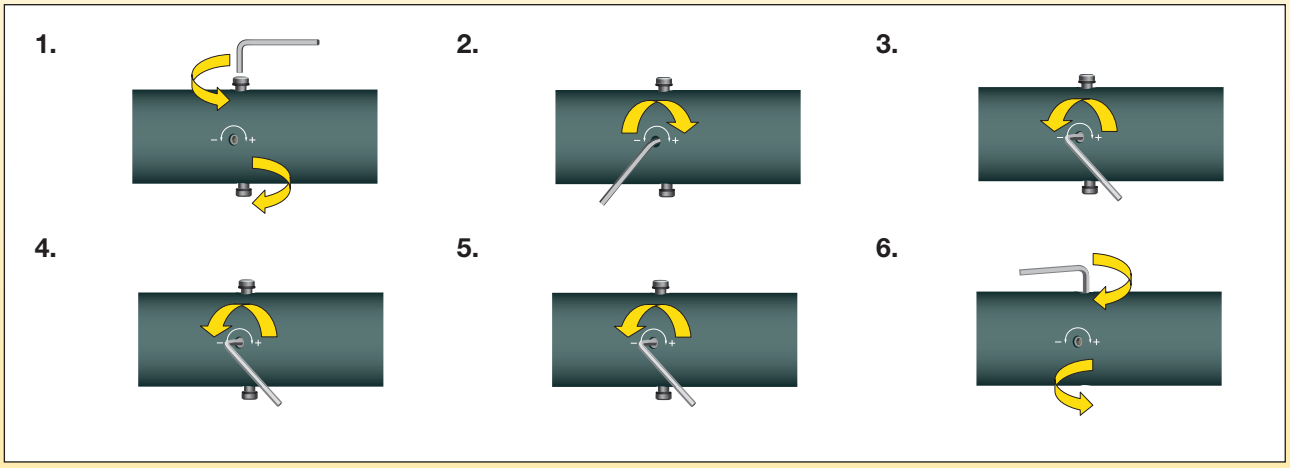

*The TTS Milling Adapters will need to be re-tuned if the milling cutter is replaced with another with different mass.

Tunable Boring Bars

The Kennametal complete portfolio of Tunable Boring Bars helps prevent chatter and other problems associated with an internal dampening package designed for deep-hole boring applications.

Advantages

Optimal Rigidity

Eliminates vibration to improve surface quality and tolerance.

Increased Productivity

Larger depth of cut and better chip removal by up to 10:1 (steel) and 15:1 (carbide) length-to-diameter ratio.

Machining without Chatter or Vibration

Less noise exposure and improved results.

Tunable Damping Mechanism

To account for different vibration behavior, bars can be tuned on the machine, and tools can be adjusted.

Relative Stability

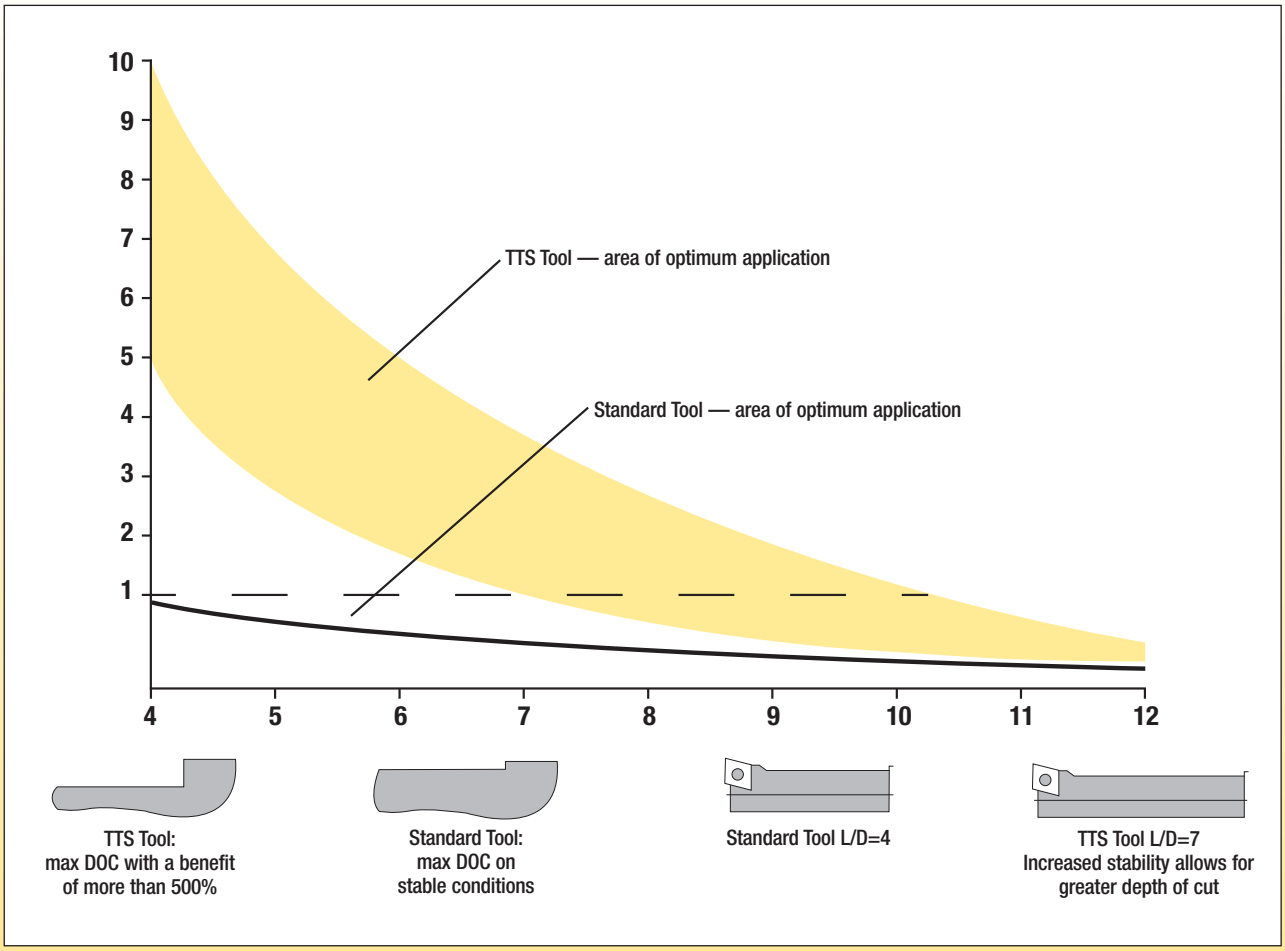

Note: This chart illustrates how KM™ Tunable Boring Bars proivde greater stability than standard toolholders, even in larger tool length-to-diameter ratios. Increased stablilty enables greater depth of cut.

General Guidelines for Boring with Extended Reach Bars

1. Select the largest boring bar diameter possible. Larger diameter bars are stiffer and more stable. Remember to leave enough space for chip evacuation.
2. While larger diameters are more stable, the diameter may also be too large, preventing proper chip evacuation, affecting surface finish, or damaging the bar. Ensure the bar diameter is not so large that it will interfere with chip evacuation.
3. Keep the overhang length of the tunable boring bar as short as possible. For Tunable Boring Bars, select the shortest bar possible.
4. Balance machining parameters to prevent the occurrence of uncontrolled vibrations and resonance.
5. The tool setting angle should be as close as possible to 90°.
6. Make sure the insert is in the correct center position.
7. By choosing a small corner radius you can reduce forces on the workpiece.
8. Use cutting heads with a negative back-rake angle that is as small as possible.
9. Using inserts with a positive chip former is preferred.
10. Change inserts when any flank wear is detected because radial back forces will increase in proportion to wear.

Selecting the Correct Bar

Kennametal offers TTS Boring Bars with KM™ back-ends or straight shanks, KM front-ends, or bolt-on head connections, and they are available in either steel or carbide.

To find the appropriate boring bar, first consider that the length-to-diameter ratio (L:D) should always be kept as small as possible. The smaller the L:D ratio, the greater the stiffness and stability of the bar.

The L:D ratios of Tunable Boring Bars are fixed, where straight shank tunable bar L:D ratios are not. When using straight shank bars, the overhang length should be kept as small as possible.

Please note that only standard pretuned straight shank tunable bars are pretuned at the factory for 10:1 L:D. If the straight shank bar is mounted with less than 10:1 L:D, it may be necessary to retune the bar. This is discussed in more detail in the “Tuning the Bar” section.

Holding Method

The holding method is as critical to performance as selecting and tuning the boring bar. The connection between the boring bar and the machine should be as rigid as possible. Rigid connections enable the tuner mass to function more effectively. The minimum holding length of the bar should be 2.5x the diameter of the bar.

Various connection methods are shown below and listed from most stable to least stable:

Face and Taper Contact with Interference Fit
Example: KM Tunable Boring Bar clamped with short overhang
KM clamping unit on turret

Split Sleeve/Full Cylindrical Contact
Example: Straight Shank Tunable Boring Bar with split sleeve

Screw Clamping
Example: Straight Shank Tunable Boring Bar with screw clamping on bar flat

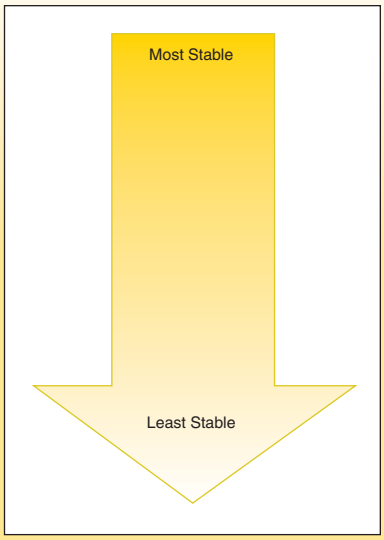

Tuning the Bar

Standard tunable boring bars are pretuned at our factory. Though they may work right out of the box on some machines, for others, they may chatter because of differences in dynamic response. Chatter can be eliminated by optimally tuning the boring bar for a given setup, and the key benefit of our tunable boring bars is that they can be adjusted for any application. Therefore, corrections can be made to put the tool in tune with your machine, optimizing dynamic stiffness and negating chatter.

Several factors influence the required adjusting screw setting on tunable boring bars, including:

- Overhang and L:D ratio.
- Depth of cut.
- Overall dynamics and rigidity of the machine.

When retuning, it is best to slightly under-tune the bar. For this reason, the tuning process focuses on identifying the adjusting screw setting where chatter starts, and then backing off the screw by a 1/2 turn in the negative direction.

Retuning a Tunable Boring Bar

1. Loosen both clamping screws.
2. Turn the adjusting screw in the positive direction until it becomes snug. The adjusting screw becomes snug when it locks the tuner mass.
3. Turn the screw one complete turn in the negative direction and take a test cut.
4. Repeat Step 3 until chatter is eliminated.
5. (A) Once chatter is eliminated, note that it starts between the current screw setting and one turn in the positive direction. Make 1/4 turn adjustments within this range, taking test cuts for each setting, until you can identify the adjusting screw setting that causes chatter to start. (B) Once the adjusting screw setting that causes chatter is determined, back the adjusting screw off a 1/2 turn in the negative direction.
6. Tighten both clamping screws and take a test cut to confirm desired results.

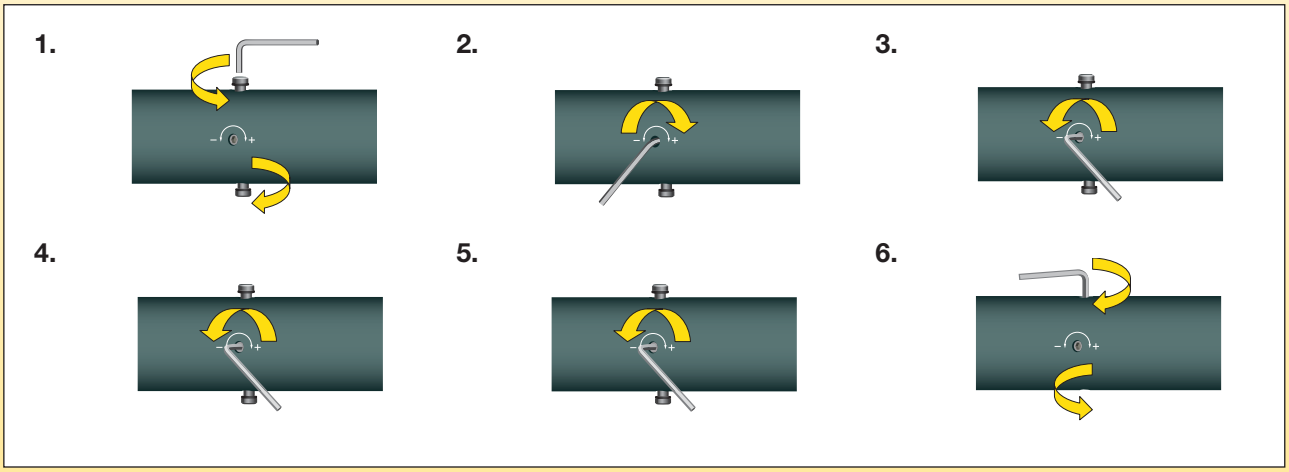

Screw-On Adapters

The universal design of Kennametal Screw-On Milling Cutter Adapters enables old and new tool styles to be used interchangeably yet maintain a rigid connection. All adapters offer superior runout accuracy, high metal removal rates, and through-coolant capability. Screw-On Milling Cutter Adapters can be used with Kennametal's wide range of best-in-class inserts to guarantee excellent cutting results, performance, and productivity.

Screw-On products can also be used with a variety of machining applications ranging from low-speed milling applications to rates greater than 20,000 RPM, with the added feature of coolant directed to the cutting edge. The system's accuracy, repeatability, and stability should be equal or greater to the performance of any similar systems on the market today in all applications.

Features, Functions, and Benefits

- All adapters have through-coolant capability.
- All products are stock standard products.
- High accuracy — low runout.
- Stable system for helix, pocket milling, contour cutting, and ramping.
- KM™, HSK, and steep taper prebalanced to G6.3 at 16,000 RPM.
- Extensions and reducers are designed with through-coolant prevision.
- The fine-tuned Screw-On indexable end mill cutters and the KM/ERICKSON™ toolholders together with a wide range of best-in-class inserts ensure excellence in cutting results, performance, and productivity.

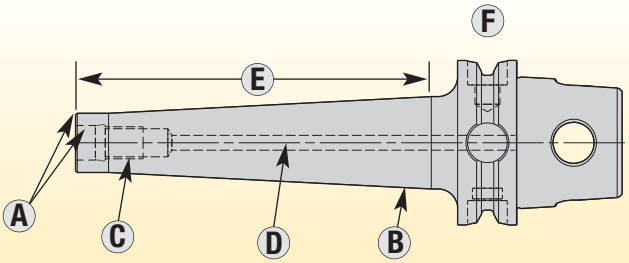

A. Ground pilot and face for high rigidity and accuracy.
B. Extended shanks have slow taper for added rigidity.
C. Thread locking system.
D. Through coolant on all adapters.
E. Designed for long reach.
F. Balanced.

Applying Screw-On Adapters

Heavy-Metal Adapters

- Devibration extensions with heavy metal (Densimet™ D176).
- Internal threads with accurate mating surface for best possible concentric and axial runout with the extended tools.
- Through-coolant capability.

Extensions with Weldon® Shank

- Screw-On type extension with Weldon shank, as per DIN 1835-B.
- Shank manufactured as per DIN 1835-B, internal-coolant capability.

Reducers

- Adapter uses Screw-On tools with smaller size.
- Through-coolant capability.
- Mating surface helps generate accurate concentric and axial runout.

Extensions

- Adapter uses Screw-On tools with larger thread size.
- Through-coolant capability.
- Mating surface helps generate accurate concentric and axial runout.

*To learn more, **scan here**.*
For instructions on how to scan, please see page xxxiii.

Tightening Torque Milling Head

Connecting thread size	Tightening torque	Mounting key size (mm)
M10	40 Nm	15
M12	60 Nm	17
M16	80 Nm	24

Through-Coolant Shell Mill Adapters

Shell mill adapters with high-pressure and high-volume through-coolant capability are now available as standard offerings. Their unique design enables maximum coolant flow to be channeled directly to a tool's cutting edge.

These latest shell mill adapters with through coolant are ideal for holding indexable milling cutters. Together, the toolholder and cutter ensure excellence in tool life, surface quality, and productivity. With this combination, high-pressure or high-volume coolant can dramatically improve surface finishes, reduce tool wear, decrease cutting force, and control chip shape and evacuation. This makes through-coolant shell mill adapters perfect for machining hardened steels and other difficult-to-cut materials like titanium.

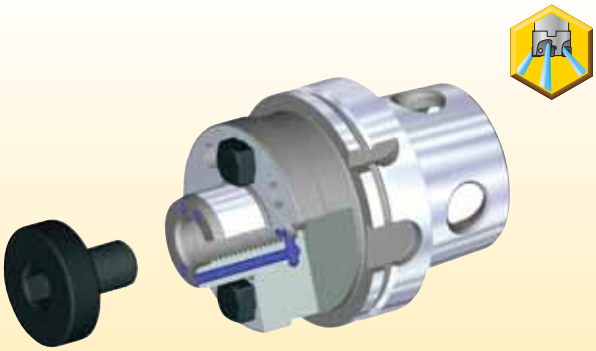

Options

- Extended lengths available in standard stocked offering.
- Drive keys upgraded to high-strength material, allowing for high-torque capability.
- Adapters are set for form AD coolant and can be converted to form B flange coolant using adjusting screws.
- No extra components necessary to buy for standard tools.

Coolant Flow Options

- Through holes in the face of the pilot.
- Through the center.

Collet Chuck Styles

TG Collet Chucks

Primarily for gripping straight shanks, TG collet chucks are the ERICKSON™ industry standard. These chucks offer flexibility for drilling, milling, and tapping applications and are also capable of gripping Whistle Notch™ cutters. TG collet chucks should be used for medium to light operations.

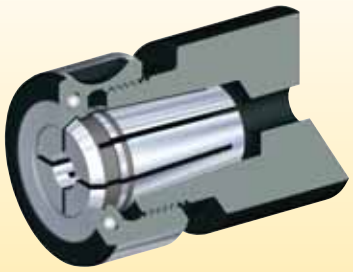

TG collet chucks have a range of dedicated milling and tap collets available. Balanceable locknuts are offered for operating at relatively high speeds. Sealing/coolant locknuts and bonded collets are also available for chucks utilizing through coolant.

- Clamping range of 0,3mm (.016").
- Good rigidity and gripping power of 3:1.
- Good concentricity.

ER Collet Chucks

As the DIN 6499 industry standard, ER collet chucks are designed to grip straight shanks. They are flexible for drilling, light milling, and tapping applications. ER collet chucks are used for medium to light applications at medium speeds.

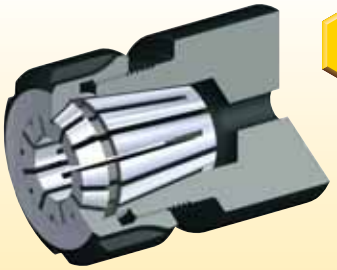

DIN 6499

Dedicated tap collets are available for this style collet chuck. For ER collet chucks using through coolant, sealing and coolant locknuts are available.

- Wide clamping range of 1mm (.040").
- Fair rigidity and gripping power of 2:1.
- Good concentricity.

(continued)

Collet Chuck Styles *(continued)*

DA Collet Chucks

DA collet chucks are an ERICKSON™ industry standard. They are intended for gripping straight shanks, but the DA style also has the ability to grip drill margins. This eliminates center drilling by shortening the drill. DA collet chucks also offer flexibility for drilling, milling, and tapping.

Milling and tap collet styles dedicated to the DA style are available. These chucks can also make use of bonded collets when employing through coolant. DA collet chucks can utilize three styles of locknuts.

- Clamping range of 0,8mm (.031").
- Fair rigidity and gripping power of 1:1.
- Concentricity >0,025mm (.001").

DA — 01 Series
Extended Nose Style

Long nosepiece bearing and compensating locknut delivery offer proper axial position and prevent twisting. This style is ideal when extreme accuracy is required.

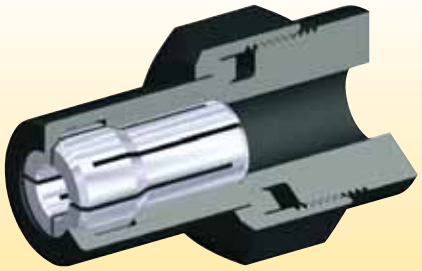

DA — 04 Series
Close Center Style

Designed at the minimum safe outside diameter to solve close center problems. This style should be used where reach and close proximity of workpiece problems are encountered.

DA — 08 Series
Stub Nose Style

This DA style has a compensating nose ring with the locknut that allows collets to find their own axial position and prevent twisting. They should be used when better rigidity is required.

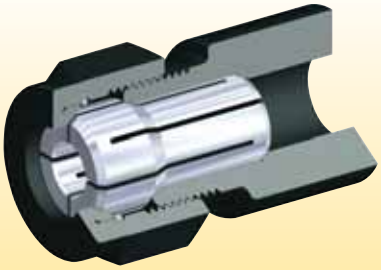

TG • Tremendous Grip

ERICKSON™

- Provides Tremendous Grip and accuracy for all drilling applications.
- 0,4mm [1/64" (.016")] range of collapse.
- Grips on back taper and margin of drill for maximum feed rates and more accurate holes.
- Manufactured to DIN 6499 Class 2 accuracy.

TGC • Tremendous Grip Coolant

ERICKSON™

- Rubber-filled slots seal collet for coolant-fed tool applications.
- Suitable for coolant pressure up to 100 bar (1500 psi).
- Unique design features permit easy entry into nosepiece.
- Available from stock in all popular sizes.
- Fits all standard TG-style collet chucks.
- 0,13mm (.005") range collapse.
- Design enables flutes of drills to enter collet, unlike competitive designs.

TGHP • Tremendous Grip High Precision

ERICKSON™

- Twice as accurate as standard TG- and ER-style collets.
- Available from stock in all popular sizes.
- Can be used in all standard TG-style collet chucks.
- 0,25mm (.010") range of collapse.
- Manufactured to DIN 6499 Class 1 accuracy.

TGCHP • Tremendous Grip Coolant High Precision

ERICKSON™

- Rubber-filled slots seal collet for coolant-fed tool applications.
- Suitable for coolant pressure up to 100 bar (1500 psi).
- Unique design features permit easy entry into nosepiece.
- Available from stock in all popular sizes.
- Fits all standard TG-style collet chucks.
- 0,13mm (.005") range of collapse.
- Manufactured to DIN 6499 Class 1 accuracy.

TGNP • Tremendous Grip Non-Pullout, Weldon® Style

ERICKSON™

- Positive retention and drive provided by drive wedge in collet.
- Eliminates inaccuracy created by solid end mill holders.
- 0,13mm (.005") range of collapse.
- Fits all standard TG-style collet chucks.

TGST • Tremendous Grip Single-Angle Tap Collet

ERICKSON™

- Designed to grip the tap on the shank and square.
- Fits all standard TG-style collet chucks.
- 0,13mm (.005") range of collapse.

TGSTC • Tremendous Grip Single-Angle Tap Collet, Coolant Style

ERICKSON™

- Rubber-filled slots seal collet for coolant-fed tool applications.
- Suitable for coolant pressure up to 70 bar (1000 psi).
- Designed to grip the tap on the shank and square.
- Fits all standard TG-style collet chucks.
- 0,13mm (.005") range of collapse.

ER • Single Angle

ERICKSON™

- Provides good grip and accuracy for all drilling applications.
- Wide clamping range.
- Available in both inch and metric bores.
- 1mm (.040") range of collapse.
- Manufactured to DIN 6499 Class 2 accuracy.

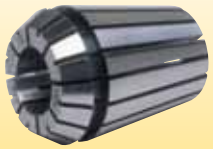

ERTC • Single-Angle Tap Collet

ERICKSON™

- Designed to grip taps on shank and square to eliminate slippage.
- Fits all standard ER-style collet chucks.
- 0,13mm (.005") range of collapse.

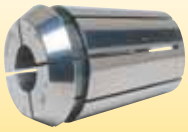

ERTCT • Single-Angle Tap Collet with Axial Compensation

ERICKSON™

- Designed to grip taps on shank and square to eliminate slippage.
- Tension only, cost-effective solution for machines that require axial compensation for tapping.
- Fits all standard ER-style collet chucks.

DA • Double-Angle

ERICKSON™

- 0,8mm [1/32" (.031")] range of collapse.

DAC • Double-Angle Coolant

ERICKSON™

- Rubber-filled slots seal coolant-fed tool applications.
- Suitable for coolant pressure up to 70 bar (1000 psi).
- Fits all standard DA-style collet chucks.
- 0,13mm (.005") range of collapse.

DANP • Double-Angle Non-Pullout — Weldon® Style

ERICKSON™

- Designed to grip end mills with Weldon-style shanks.
- Positive retention and drive provided by drive wedge in collet.
- Eliminates inaccuracy created by solid end mill adapters.
- Fits all standard DA-style collet chucks.
- 0,13mm (.005") range of collapse.

TG Collet Series

The TG collet series is the first choice when high precision, gripping torque, and versatility are required. These single-angle collet chucks grip at approximately 3:1 for grip torque versus tightening torque without a stop screw.

The taper's slow angle produces a sticking action, so collets must be snapped into the locknut before assembling the locknut onto the chuck. Follow the procedure on page M103 for assembly/disassembly instructions.

Standard Collet

- 0,40mm (.016") maximum collapse.

Bonded Seal Collet

- 0,13mm (.005") maximum collapse.
- 100 bar (1,500 psi) coolant pressure.

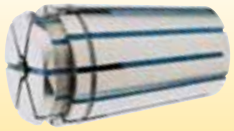

DA Collet Series

DA-style collet chucks have a grip of approximately 1:1 tightening torque versus grip torque.

ER Collet Series

The ER collet series is an international standard style used for many applications. Collets from this series are ideal for boring, milling, reaming, tapping, and grinding.

ER collets are manufactured from alloy steel and hardened for long life. They offer a grip of approximately 2:1 tightening torque versus grip torque. See page M103 for assembly/disassembly instructions.

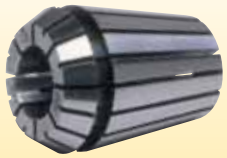

TG and ER Collet Assembly/Disassembly Instructions

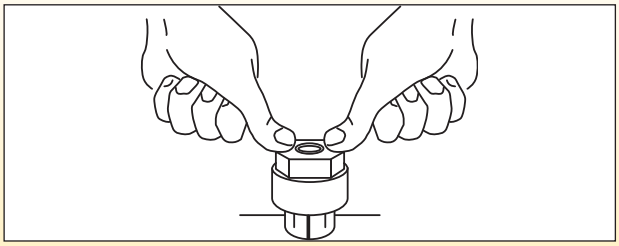

- First, place the locknut with nose ring over collet nose. Apply force on the locknut until it snaps into place. The nose ring is now seated into the collet undercut and should turn freely.

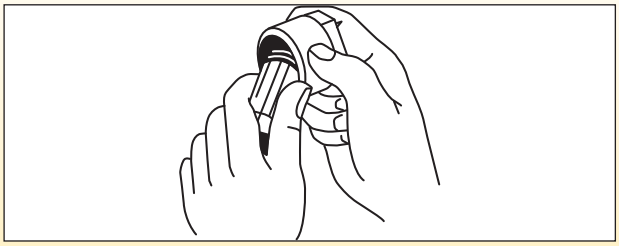

- To remove the collet from the locknut, hold the nut firmly in one hand and apply a bending action on the collet with the other hand until the collet snaps free from the nose ring.

NOTE
Inserting the cutting tool less than 2/3 the gripping length into the collet can permanently damage the collet. The full length of the gripping bore needs to be maintained to achieve maximum accuracy and safety. Collet accuracies are based on size-for-size conditions. Using the collapsible range can influence the accuracy and gripping powers. Never try to stretch collets by clamping oversized cutting tools.

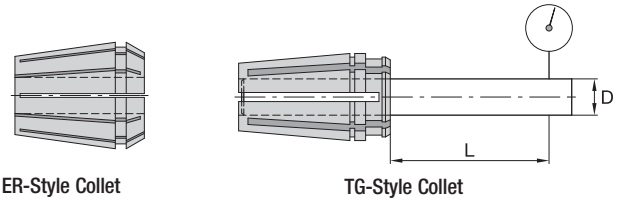

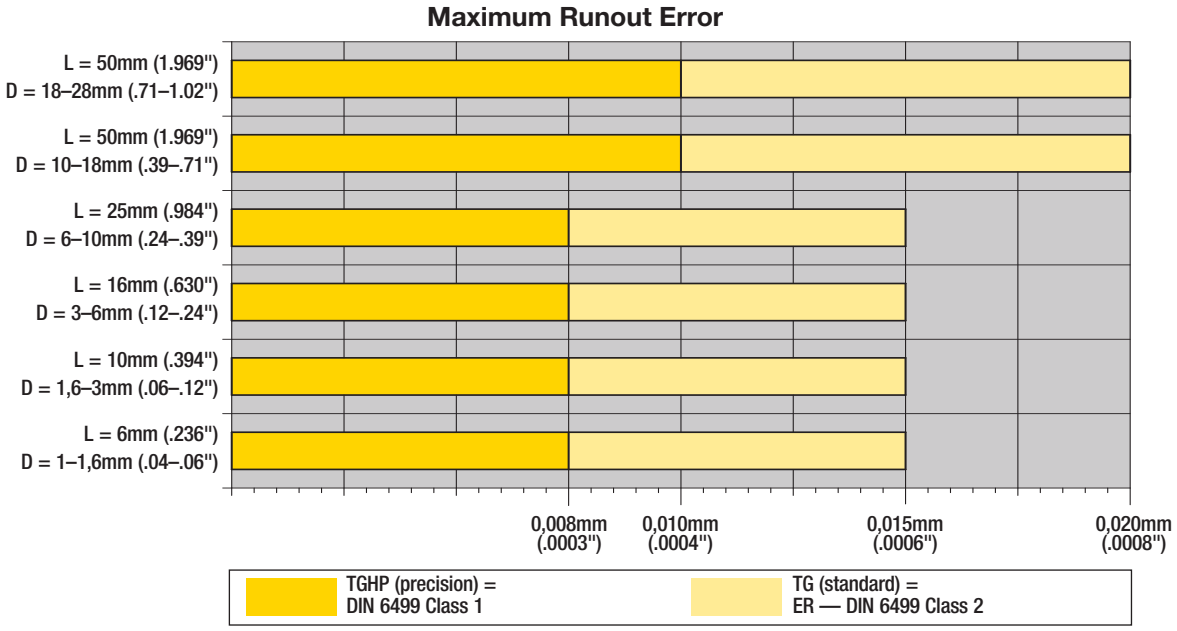

Gripping Strength Comparison Chart • Metric

ER collet chuck based on ER40		TG collet chuck based on TG100		standard hydraulic		Slim Line hydraulic	
mm	Nm	mm	Nm	mm	Nm	mm	Nm
3	—	3	—	3	—	3	—
4	—	4	—	4	—	4	—
5	—	5	—	5	—	5	—
6	38	6	—	6	12	6	26
8	52	8	115	8	30	8	50
10	70	10	144	10	40	10	80
12	103	12	300	12	70	12	115
14	108	14	312	14	100	14	160
16	118	16	325	16	135	16	200
18	156	18	339	18	180	18	250
20	206	20	384	20	220	20	230
25	255	25	536	25	500	25	—
32	—	32	569	32	700	32	—
40	—	40	—	40	—	40	—
50	—	50	—	50	—	50	—

Gripping Strength Comparison Chart • Inch

ER collet chuck based on ER40		TG collet chuck based on TG100		standard hydraulic		Slim Line hydraulic	
in	ft. lbs.	in	ft. lbs.	in	ft. lbs.	in	ft. lbs.
1/8	—	1/8	—	1/8	—	1/8	—
3/16	—	3/16	—	3/16	—	3/16	—
1/4	28	1/4	—	1/4	9	1/4	19.2
5/16	38	5/16	85	5/16	22	5/16	—
3/8	52	3/8	106	3/8	30	3/8	59
7/16	—	7/16	—	7/16	—	7/16	—
1/2	76	1/2	221	1/2	55	1/2	89
9/16	80	9/16	230	9/16	74	9/16	—
5/8	87	5/8	240	5/8	100	5/8	148
11/16	115	11/16	250	11/16	129	11/16	—
3/4	152	3/4	283	3/4	148	3/4	155
7/8	—	7/8	—	7/8	—	7/8	—
1	188	1	395	1	369	1	—
1 1/4	—	1 1/4	420	1 1/4	516	1 1/4	—
1 1/2	—	1 1/2	—	1 1/2	—	1 1/2	—
2	—	2	—	2	—	2	—

NOTE: Torque values in in. lbs.
Minimum values calculated for maximum bore size and minimum shank size.
Maximum values calculated for minimum bore size and maximum shank size.

Gripping Strength Comparison Chart • Metric

	milling chuck		Shrink Fit			
			standard (Nm)		high torque (Nm)	
	mm	Nm	min	max	min	max
	3	—	3.3	11	—	—
	4	—	5.2	16	—	—
	5	—	6.8	20	—	—
	6	—	19	116	—	—
	8	—	26	176	—	—
	10	—	91	312	—	—
	12	—	132	445	269	582
	14	—	169	546	346	723
	16	—	253	587	444	779
	18	—	304	865	540	1101
	20	1127	412	1049	654	1292
	25	1666	901	1896	1233	2227
	32	2347	1033	2079	1338	2384
	40	—	1907	3482	2432	4007
	50	—	2651	4465	3029	4843

Gripping Strength Comparison Chart • Inch

	milling chuck		Shrink Fit			
			standard (ft. lbs.)		high torque (ft. lbs.)	
	in	ft. lbs.	min	max	min	max
	1/8	—	3.2	13	—	—
	3/16	—	4.6	19	—	—
	1/4	—	13	86	—	—
	5/16	—	18	117	—	—
	3/8	—	53	196	—	—
	7/16	—	65	269	—	—
	1/2	—	111	340	225	455
	9/16	—	160	410	285	535
	5/8	—	172	442	307	576
	11/16	—	262	648	427	814
	3/4	831	336	797	509	970
	7/8	—	363	791	524	951
	1	1229	674	1382	939	1647
	1 1/4	1731	784	1445	1115	1775
	1 1/2	—	1132	1818	1389	2075
	2	—	1942	3049	2357	3465

NOTE: Torque values in in. lbs.
Minimum values calculated for maximum bore size and minimum shank size.
Maximum values calculated for minimum bore size and maximum shank size.